WABCO

SERVICE MANUAL 5801

INSTALLATION AND ALIGNMENT OF HC-100 HIGHWAY CROSSING SIGNALS

* * * * * * * * * * * * * * * * *

Installation

When installing the new Union Aluminum Combined Junction Box and Cross Arm, use the following order of procedure.

1. Make certain that the ball-socket adjustment is clamped in the mid-position of its adjustment.

2. On 4-light cross arms, rotate the tee fitting on the end of the cross arm until both light units are aligned as closely as possible to the desired alignment then tighten the set screw to hold the tee in place on the arm.

3. On 2-light cross arms, rotate the elbow fitting on the arm until the light unit is rougly in alignment, then tighten the set screw to hold the elbow in place.

August, 1973
AO.73-5M-1113.4

PRINTED IN U.S.A.

WESTINGHOUSE AIR BRAKE COMPANY
UNION SWITCH & SIGNAL DIVISION
Swissvale Post Office, Pittsburgh, Pa. 15218
An American-Standard Company

Alignment

The HC-100 crossing signal unit has been designed for one man alignment. Factory setting of the lamp socket has aligned the light beam on the axis of the signal. To make the final alignment, proceed as follows.

1. Open the signal door and firmly insert WABCO sighter, Pc. UN170622-Sh. 4-C9003, into the tapered socket near the bottom of the signal case with the sighting tube arm positioned downward.

2. Loosen the locking screws on the clamp holding the ball-socket adjustment sufficiently that the signal unit can just be moved in the ball socket.

3. Standing behind the signal unit, grasp the sides of the signal case with both hands and look through the sighting tube, moving the signal case slowly until the cross hairs of the sighter are aligned on the desired location on the highway in advance of the signal.

4. Tighten the locking on this adjustment and recheck the signal alignment before removing the sighter. If necessary, repeat alignment procedures.

5. Close signal door.

The high light output on the signal axis by the new long range roundels is of sufficient intensity and concentration to permit a visual alignment check in the field without opening the signal door.

NOTE: This service manual was prepared for use on initial installation of HC-100 signals and is distributed with each signal shipped. This Pamphlet is not intended for maintenance purposes. Maintenance is covered in Service Manual 5893.

WABCO

REF.	PIECE	DESCRIPTION	DRAWING	USED ON
17	UM187235	. Pin	8097-466	2, 2a
18	UN207953	. Receptacle Holder Complete	C16647-5	2, 2a
19	UM208510	. . Receptacle Strap	C16647-5	18
20	UM208511	. . Receptacle Strap	C16647-5	18
21	UM208512	. . Receptacle Strap	C16647-5	18
22	UJ72466	. . Lamp Receptacle Complete	12415-40	18
23	UJ51263	. . Machine Screw, No. 8 - 36 x 3/8" fil. hd.		18
24	UM32498	. . Nut (not shown)	8109-223	18
25	UJ49081	. . Rivet, 5/32" x 5/16" rd. hd. ph. bz.		18
26	UM147988	. . Clip	11893-393	18
27	UJ49811	. . Rivet	10301-1	18
28	UN208513	. . Lead Complete	B9991-14	18
29	UN207915	. Hood	C16647-4	2, 2a
30	UN207911	. Phankill Unit	C16647-3	2, 2a
31	UM193598	. Terminal Block Complete with one Binding Post	9968-1128	2, 2a
32	UM193599	. Terminal Block Complete with two Binding Posts	9968-1128	2, 2a
33	UJ47818	. Washer	7828-139	2, 2a
34	UM127260	. Nut	8109-194	2, 2a
35	UM29101	. Nut	8109-193	2, 2a
36	UM157117	. Clip	11893-473	2, 2a
37	UJ51686	. Machine Screw, No. 14-24 x 3/8" rd. hd.		2, 2a
38	UJ51666	. Machine Screw, No. 10-32 x 3/8" rd. hd.		2, 2a
39	UM207946	. Gasket	8078-1636	2, 2a
40	UJ50090	. Cap Screw, 1/2" - 13 x 1-1/4" hex. hd.		2, 2a
41	UJ47769	. Lock Washer, 1/2"		2, 2a
42	UJ47457	. Gasket	8078-1887	2, 2a
43	UJ52300	. Machine Screw, 10-32 x 5/8" fil. hd. steel		2, 2a
44	UJ52501	. Drive Screw, No. 4 x 1/4" rd. hd. hardened		2, 2a
45	UJ48603	. Cotter Pin, 1/16" x 1/2" steel		2, 2a
46	UM322410	. Gasket, Used with Phankil Unit (not shown)	8078-1736	2, 2a
50	UJ71574	Lamp, 10 Volt, 25 Watt, single filament, single contact bayonet candelabra base	12409-12	2, 2a

WABCO

SERVICE MANUAL 5901

HC-9 ILLUMINATED SIGN
FOR HIGHWAY CROSSING SIGNALS

* * * * * * * * *

PARTS LIST

This service manual provides a detail parts list for HC-9 Illuminated Signs for Highway Crossing Signals.

Information pertaining to the use of the detail parts list is provided at the beginning of the list.

PRINTED IN U.S.A. A0.70-500-1481.1

WESTINGHOUSE AIR BRAKE COMPANY
SIGNAL & COMMUNICATIONS DIVISION
Swissvale Post Office, Pittsburgh, Pa. 15218
An American-Standard Company

May, 1970

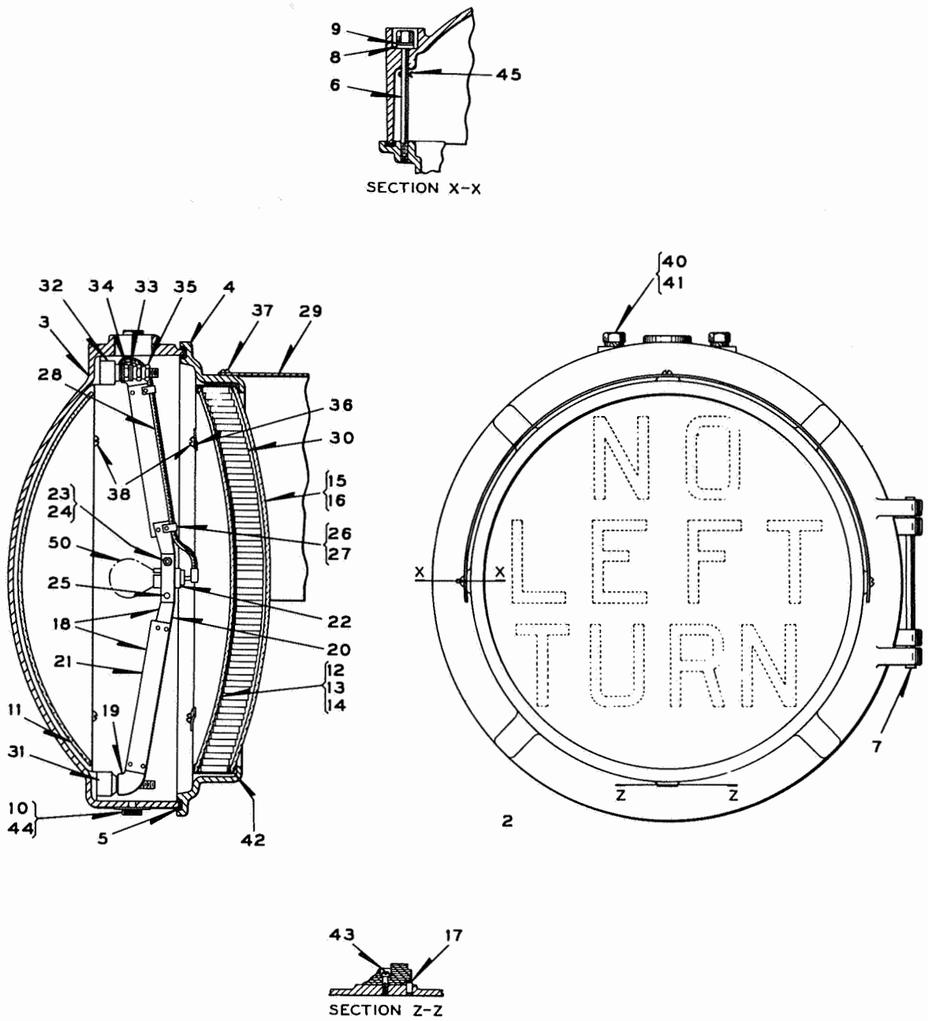

Figure 1. HC-9 Illuminated Sign For Highway Crossing Signals

HC-9 ILLUMINATED SIGN FOR HIGHWAY CROSSING SIGNALS

Detail Parts List

Illuminated Signs in this parts list do not include Lamp Ref. 50.

Indented item descriptions indicate that the references in the "Used On" column refer to this parts list.

Order By Reference, Piece, and Abbreviated Description

REF.	PIECE	DESCRIPTION	DRAWING	USED ON
2	UN207949	Style HC-9 Illuminated Sign complete (No Left Turn). .	C16646-1	
2a	UN207950	Style HC-9 Illuminated Sign complete (No Right Turn).	C16646-1	
3	UM207951	. Case	C16647-1	2, 2a
4	UM207908	. Door	C16647-2	2, 2a
5	UM207916	. Gasket	8078-1579	2, 2a
6	UM177880	. Locking Stud	8114-803	2, 2a
7	UM210214	. Pin	B10206-1	2, 2a
8	UJ47731	. Washer	8078-422	2, 2a
9	UM38149	. Washer	7826-98	2, 2a
10	UM170243	. Ventilator	11893-573	2, 2a
11	UJ53399	. Reflector	12652-16	2, 2a
12	UN224781*	. Glass Stencil Complete with Rubber Gasket, 14" diameter (No Left Turn) clear letters on black background	8163-314	2
12a	UN224780*	. Glass Stencil Complete with Rubber Gasket, 14" diameter (No Right Turn) clear letters on black background	8163-313	2a
13	UJ53396	. . Glass Stencil (No Left Turn)	8163-314	12
13a	UJ53397	. . Glass Stencil (No Right Turn)	8163-313	12a
14	UJ47457	. . Gasket	8078-1887	12
15	UN221718	. Clear Convex Cover Glass, 14" diameter, with rubber gasket.	8163-315	2, 2a
15a	UJ53395	. . Clear Convex Cover Glass	8163-315	15
16	UJ47457	. . Gasket	8078-1887	15
		* NOTE: Glass stencils having legends other than those listed can be furnished upon request.		

WABCO

An American-Standard Company

SERVICE MANUAL 5893

STYLE HC-100 SIGNAL UNIT

MAINTENANCE INSTRUCTIONS

CONTENTS

		Page
I.	GENERAL	2
II.	DESCRIPTION	2
III.	HC-100 SIGNAL UNIT ALIGNMENT	2
IV.	MAINTENANCE	3
V.	PARTS LIST	9

April, 1979
C-79-250-1442-3

PRINTED IN U.S.A.

UNION SWITCH & SIGNAL DIVISION
WESTINGHOUSE AIR BRAKE COMPANY
Swissvale, PA 15218

I. GENERAL

This Service Manual describes the assemblies for the HC-100 Signal Units and provides information for light unit alignment and maintenance. Complete parts list for the Signal Units is shown in Figure 5-1.

The Style HC-100 Signal Unit supersedes the Style HC-81 Signal Unit. The HC-100 light unit assembly is completely interchangeable with the earlier cast iron combined junction box crossarm used with the HC-81. The HC-100 is furnished with an attached adapter for mounting to the XA-120 crossarm and to crossarms of other manufacturers. The unit may be used with the earlier HC-100 aluminum crossarm by discarding this adapter. See Service Manuals 6047 and 6048.

The horizontal lamp receptacle bracket as shown in Figure 5-1 has been superseded by a vertical type bracket which is completely interchangeable. Alignment procedures are the same for both type brackets as outlined under "Maintenance".

II. DESCRIPTION

The HC-100 Signal Unit assemblies offer two arrangements: 4-light units (back to back) on one crossarm, or 2-light units on one crossarm.

Light units are designed with a built-in means for alignment with the use of a sighter tube. Alignment procedures are outlined under "HC-100 Signal Unit Alignment" and "Maintenance".

HC-100 light units can be mounted to crossarms of other manufacturers with 1¼" pipe thread adapters furnished. See Figure 5-1E.

The roundel guard with hood, or phankill unit are adaptable to the HC-100 light unit when required. See Figure 5-1B and 5-1C.

III. HC-100 SIGNAL UNIT ALIGNMENT

The HC-100 Signal Units have been designed for alignment by one man. When aligning the light units and aluminum combined junction box crossarm (see Service Manuals 6047 and 6048), use the following order of procedure:

1. Make certain that the ball-socket adjustment at both ends of the crossarm are clamped in the mid-position of its adjustment, then attach the light unit to the adaptor.

2. On 4-LIGHT UNIT CROSSARMS, rotate the tee fittings on the end of the crossarm until both light units are aligned as closely as possible to the desired alignment, then tighten the set screw to hold the tee in place on the arm.

3. On 2-LIGHT UNIT CROSSARMS, rotate the elbow fitting on the crossarm until the light unit is roughly in alignment, then tighten the set screw to hold the elbow in place. For angles from 10° to 30°, hood and background must be temporarily removed for alignment.

4. After the light units are mounted in position, attach the background and hood to the signal door of each unit as shown in Figure 5-1A.

Factory setting of the lamp socket has aligned the light beam on the axis of the signal. To make the final alignment, proceed as follows:

5. Open the signal unit door and firmly insert the sighter tube into the tapered socket near the bottom of the signal case with the sighting tube arm positioned downward as shown in Figure 5-1D.

6. Loosen the locking screws on the clamp holding the ball-socket adjustment sufficiently that the signal unit can just be moved in the ball socket.

7. Standing behind the signal unit, grasp the sides of the signal case with both hands and look through the sighting tube, moving the signal case slowly until the cross hairs of the sighter are aligned on the desired location on the highway in advance of the signal.

8. Tighten the locking on this adjustment and recheck the signal alignment before removing the sighter. If necessary, repeat alignment procedures.

9. Close signal unit door.

IV. MAINTENANCE

Maintenance of HC-100 Signal Units consists of cleaning the lamps, the roundel, and the reflector surfaces and replacement of the lamp. Caution should be exercised so as not to disturb the position of the lamp with respect to the reflector.

A. Lamps

The 10-volt 18 watt lamp is generally used in Highway Crossing Signals. It is normal practice to operate the lamps at 10 volts to obtain optimum output.

It is obvious that lamps must be replaced before the end of their rated life. It is recommended that the actual "burning" time in service for lamps should not exceed 50% of their calculated "average life" for the particular voltage applied to them as read on the "Voltage vs Life Curve", Figure 1, of Service Manual 5037 entitled "Life, Installation and Replacement of Railway Signal Lamps".

Replacement at 30% to 40% of the calculated average life is more logical; as 5% of the lamps will fail at, or before 35% of rated average life. If failure of 5% of the lamps is considered the maximum permissible during the period between renewals, it is apparent that it is necessary to replace all lamps at 35% of rated life. For further information, refer to Service Manual 5037.

Removal of old lamps and installation of new ones in the HC-100 signal is the same as for earlier type signals. As the lamps are precision type, no change in adjustments will be necessary unless the signal has been damaged. Caution should be exercised to prevent misalignment of the lamp and reflector.

If adjustment is necessary, the HC-100 signal is equipped to accept a sighting device (part no. N170622) which enables one man located at the signal to make and check alignment adjustments for the signal indication. See "HC-100 Signal Unit Alignment".

B. Cleaning Roundel and Reflector

Crossing signals are currently equipped with glass or plastic roundels and glass reflectors. Usually the glass surfaces can be cleaned with a moist cloth to remove the accumulation of dust, etc. and the surfaces wiped dry with a clean dry cloth.

Plastic roundels require a different type of cleaning procedure. Use the method outlined in the following:

1. Flush the roundel surfaces with clean water, using a chamois or soft cloth.

2. To remove oil or grease, use one of the current household detergents with water and a clean chamois, soft cloth or sponge free of dirt, grit, etc. DO NOT USE ANY SOLVENT such as alcohol, gasoline, kerosene, carbon tetrachloride or kitchen scouring compound at any time.

3. Rinse thoroughly with clean water.

4. Dry the cleaned surface with a clean cloth that is devoid of grit or dirt.

C. Damaged Signal Units

Damaged signal units fall into one of four classifications:

1. Broken roundel.

2. Broken roundel and damaged lamp receptacle.

3. Broken roundel, damaged lamp receptacle, and cracked or broken reflectors.

4. Broken case, door and other parts.

A broken roundel can be replaced and the signal restored to service after an inspection shows the lamp receptacle adjustment has not been disturbed. First, replace the broken roundel. If the gasket has not been damaged, it may be reused. It is advisable, however, when replacing a roundel that has been in service for several years to check the old gasket carefully and replace any obviously aged or questionable gaskets to avoid possible leakage troubles in the future. When the

new roundel has been installed, prop open the door of the signal, insert the sighting tube into the sighter socket in the case, and check the signal unit for proper beam alignment on the highway approach. After the signal beam has been checked to agree with the sighter, close the door of the signal and observe the indication from the roundel. Signal units that do not produce a satisfactory alignment should be re-aligned as outlined under "HC-100 Signal Unit Alignment", Section III.

Damaged lamp receptacles may not be visually evident. In instances where alignment has been disturbed, but the indication has not been noticeably reduced, it is possible to make temporary repairs by visually aligning the signal as on the earlier type of signal without a sighter. Changing or adjusting the lamp receptacle in the field is not recommended. The unit should be shopped to bring the alignment of sighter and light beam into agreement, otherwise the misalignment of the light beam will provide alignment difficulties in future.

Cracked or broken reflectors should not be replaced in the field. Instead, the unit should be replaced and returned to the repair shop for replacement of reflector and readjustment of the lamp receptacle to assure most efficient output and proper alignment.

A broken case, door, or other parts generally result in broken reflector, misplacement of lamp receptacle with attendant misalignment of the indication, reduction in efficiency, or all of these troubles, and therefore shop repairs are required.

D. Shop Repair and Adjustment for the HC-100 Signal Unit

The signal unit should be returned to the repair shop for replacement of damaged or broken parts. Then socket readjustment and beam alignment, with the sighter, should be made in a suitable dark room.

1. Test Equipment: Test equipment required for adjusting crossing signal units is as follows:

   a. A suitable adjustable test stand for supporting the signal unit firmly in position. This should be an aluminum crossarm which has a ball and socket type of adjustment. This arrangement provides simultaneous horizontal and vertical adjustments in one operation. It is convenient to have the crossarm rotate on its axis so the unit can be swung upward for the soldering operation required on the lamp receptacle. An arrangement of this kind is shown in Figure 4-1.

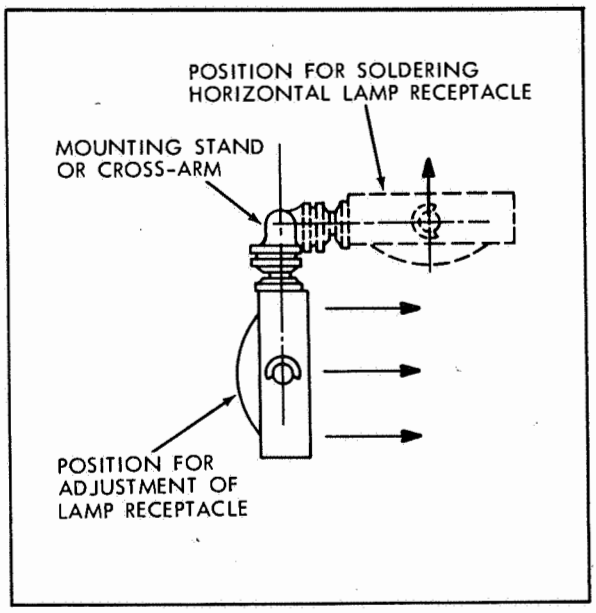

Figure 4-1. Signal Positions on Test Stand

b. The test stand should be located 50 feet from a vertical flat white screen.

c. On the flat white screen, locate a beam target at the same height as the signal axis as shown in Figure 4-2.

d. Place a small filament lamp at the location of the sighter target illustrated in Figure 4-2. This lamp may be in front of the screen or located behind a 1/2" dia. hole through the screen.

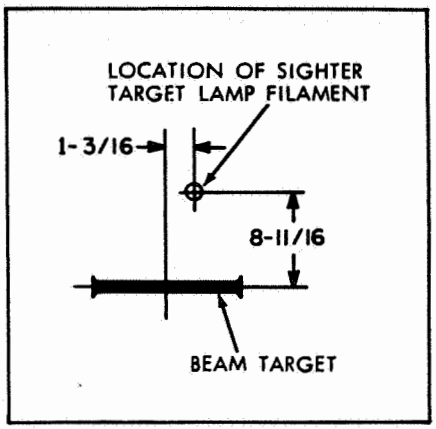

Figure 4-2. Location of Screen Targets

e. Use a standard Precision base test lamp for setting the lamp receptacle.

CAUTION

As a precaution, remove the test lamp from the signal before soldering to prevent damage to the lamp.

Check the test lamp periodically to assure of its accuracy and suitability as a test lamp. This can be accomplished by inserting the lamp in a unit which has been selected for use as a "standard" and is set aside and kept for the specific purpose of checking the test lamps and sighter alignment.

f. Sighting tube accuracy can be checked readily by the following method: Mount a sighter socket (tapered) in a fixed position so that the sighter is aligned on a prominent object approximately 1/2 mile away. Rotate the sighter 180° in the socket and check the new sighting point of the cross hairs. If the new sighting position coincides with the original sighting on the distant object, the sighter is satisfactory. If it is not satisfactory, replace the sighter with one which is accurate and have the defective sighter corrected before it is used again to adjust or to align signals. (The long sighter N187827 is more convenient than the short sighter for adjusting signal units in the dark room.)

2. Adjustment of Lamp Socket: Mount the signal unit in the test stand (Figure 4-1) located 50 feet from the flat white screen. Open the signal unit door for access to the lamp receptacle and its mounting.

Insert the sighter in the sighter socket which is inside the signal case near the bottom and place the handle of the sighter in the vertical position. Then adjust the signal case on the crossarm (or suitable test stand) until the cross hairs of the sighter have the lighted target lamp filament divided into four parts. Clamp the signal unit in this position.

After the signal unit is clamped in position, proceed to the alignment procedure which applies to the particular type of lamp receptacle bracket used in the unit.

A. Alignment Procedure for the Vertical Lamp Receptacle

Before any adjustments are made, ensure that the insulated supports are tight to prevent lamp receptacle support from shifting.

Place a standard lamp in the socket, loosen screw "A" (and lock nut) as shown in Figure 4-3A. Move the bracket in or out until maximum concentration of light beam is obtained; i.e., until the minimum size of image is obtained on the screen. This minimum image should be less than 30" in diameter at 50 feet and have a well defined outer edge. Also adjust the socket up and down for vertical beam alignment on the target. Temporarily tighten screw "A". Loosen screw "B" (and lock nut), adjust socket horizontally to center beam on target. Each adjustment effects the other, thus it may be necessary to repeat the adjustments several times before proper alignment is obtained.

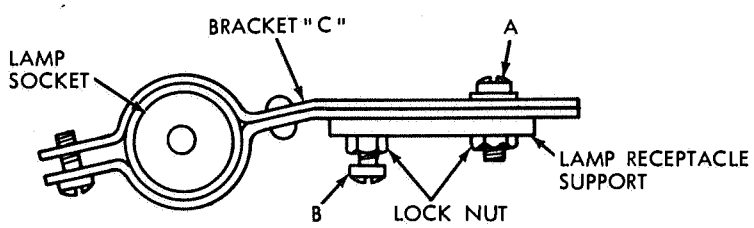

VIEW A. HORIZONTAL POSITION

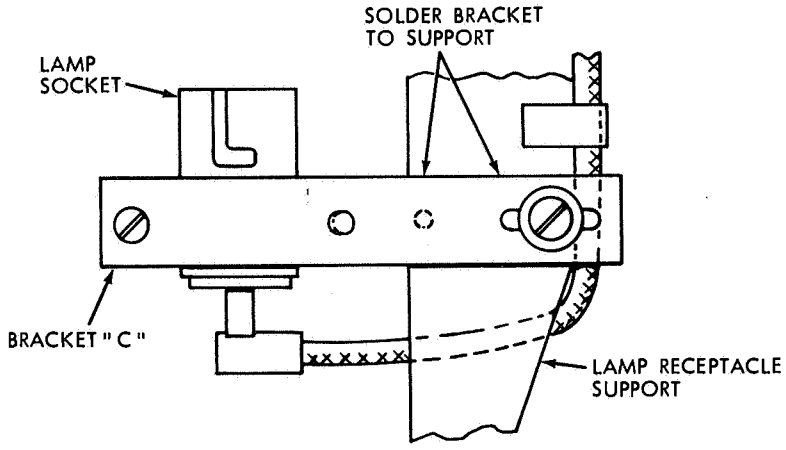

VIEW B. VERTICAL POSITION

Figure 4-3. Alignment and Soldering of Lamp Receptacle Bracket

After satisfactory adjustment has been obtained, close the signal unit door and check the appearance of the indication on the red roundel to provide a completely illuminated or well filled roundel with no dark spots. If the indication is satisfactory, open the door and rotate the signal unit so the lamp receptacle support is in the horizontal position as shown in Figure 4-3A. Solder bracket "C" securely to the lamp receptacle support as shown in Figure 4-3B.

After the socket has been soldered, check the light beam again with the sighter tube to ensure that the adjustment has not been altered during the soldering operation. If the alignment has changed, unsolder the bracket and realign the light beam to agree with the sighter. Resolder the bracket and then check the alignment again.

B. Alignment Procedure for the Horizontal Lamp Receptacle

Place a standard lamp in the socket, loosen the screw holding the socket, rotate the socket so that lamp filament is horizontal, then move the socket in and out until the maximum concentration of light beam is obtained; i. e., until the minimum size of image is obtained on the screen. This minimum image should be less than 30" in diameter at 50 feet and have a well defined outer edge. Tighten the screw to hold the socket in this position. Adjust the concentrated portion of the beam to be centered on the beam target by shifting the lamp receptacle supports on the insulated support, then tighten the supports, checking that the light beam remains on the beam target. Do not bend any portion of the lamp receptacle support arms. Check the alignment of the sighter on the filament of the target lamp. If satisfactory, close the signal door to check the appearance of the indication on the red roundel to provide a completely illuminated or well filled roundel with no dark spots.

Open the signal unit door, remove the test lamp and swing the unit up to the position shown in dotted lines in Figure 4-1. Before starting to solder the lamp receptacle, place a disc of corrugated cardboard over the reflector to protect the mirror surface from solder or tools which may be dropped into the signal unit. They can be dished to help keep it in place. Solder the socket securely to its support as shown in Figure 4-4.

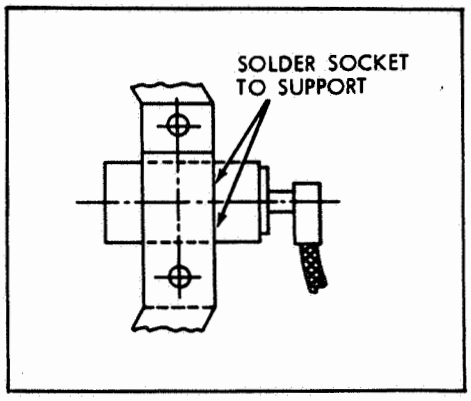

Figure 4-4. Soldering of Lamp Socket

After the socket has been soldered, check the light beam again with the sighter to see that the adjustment has not been altered during the soldering operation. If the alignment has changed, unsolder the lamp socket and realign the light beam to agree with the sighter. Resolder the lamp socket and then check the alignment again.

V. PARTS LIST

Following is a parts list for the HC-100 Signal Unit Assembly. The index numbers in this list are keyed to Figure 5-1.

ITEM NO.	DESCRIPTION	PART NO.
1	Case	M390662
2	Cover	M390663
3	Pin, Hinge	M390715
4	Gasket	A750057
5	Screen, Ventilator	M390695
6	Screw, 5/16-18 x 1 Hex. SST. Cap	J500098-0116
7	Pin, Retaining	J487093
8	Insert	J792101
9	Reflector	J53393
10	Clip	M390684
11	Screw, #8-32 x 5/16 Fil. Stainless St.	J522156
12	Terminal Block	M181832
13	Screw, #10-32 x 5/8 Rd. Stainless St.	J525263
14	Holder, Receptacle	N435909
15	Bushing, Insulating	M390711
16	Insulation	M390710
17	Washer, 1/4 Plain St. (Tin Pl.)	J47501
18	Lock Washer, 1/4 (M) St. (Tin Pl.)	J47775
19	Screw, 1/4-20 x 1 Rd. Stainless St.	J525264
20	Washer	J47818
21	Nut	M29103
22	Gasket	M390675
23	Window	M390679
24	Spring	M390680
25	Screw, #10-32 x 1/2 Rd. Stainless St.	J525262
26	Lock Washer, #10 (M) SST.	J475121-0109
27	Roundel (Red) Long Range (Plastic) 30° Spreadlite, 15° Downward Deflection	J530119
	Roundel (Red) Long Range (Plastic) 70° Spreadlite	J530117
	Roundel (Red) Long Range (Plastic) 20° Spreadlite, 32° Downward Deflection	J532119
	Roundel (Yellow) Long Range 30° Spreadlite, 15° Downward Deflection	J530120

ITEM NO.	DESCRIPTION	PART NO.
28	Rubber Gasket	J47444
30	Insulating Collar	M394087
31	Rubber Strip, 1-1/8 long	H175117
32	Strip, 1/2 Sq. Sponge Rubber	M395547
33	Sleeve	M395555
34	Pin, Cotter SST.	J48688
35	Gasket	M391734
36	Screw, 1/2-13 x 1 Hex. Aluminum	J50090
37	Lock Washer, 1/2 Ex. Hard Aluminum	J475133-0002
38	Screw	M391735
39	Screw, #8-32 x 3/8 Rd. Stainless St.	J525261
40	Nut, #8-32 Sq. St. (Cad. Pl.)	J48249
41	Lock Washer	J475104
42	Phankill Unit	N390723
43	Background, 20 inch	M390713
44	Hood	M390714
45	Roundel Guard and Hood	R396874
46	Sighter Tube (Short)	N170622
47	Adaptor for Crossarm of Other Manufacturers	N394846
48	Lamp, 10-volt, 18-watt, S.C.B.C. Base	J71463
	Lamp, 10-volt, 25-watt, S.C.B.C. Base	J71574
	Lamp, 110-volt, 25-watt, S.C.B.C. Base	J714054
49	Screw, #10-32 x 1/2 Rd. S.T.	J525262
50	Washer, #10 (M) SST.	J475121-0109

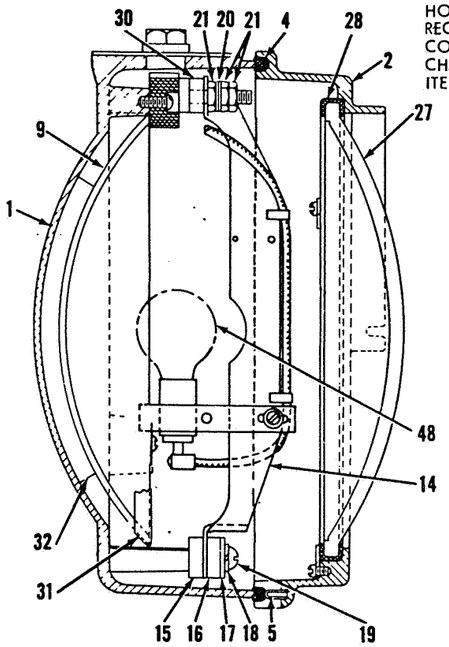

VIEW SHOWING VERTICAL POSITIONED LAMP RECEPTACLE.

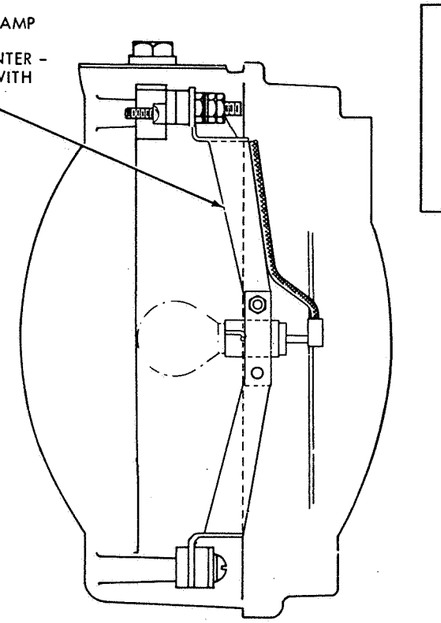

VIEW SHOWING HORIZONTAL POSITIONED LAMP RECEPTACLE SUPERSEDED BY VERTICAL POSITIONED LAMP RECEPTACLE.

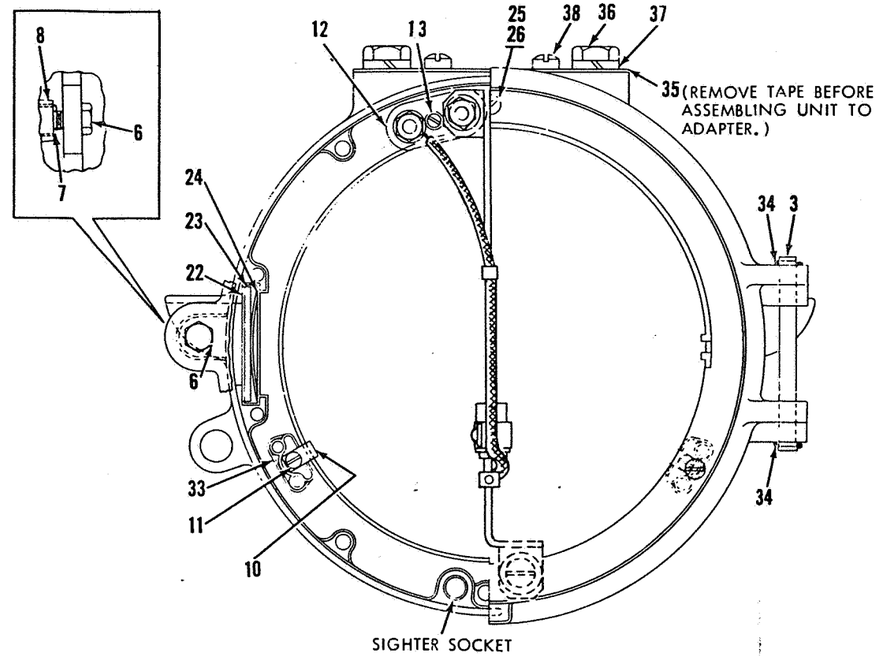

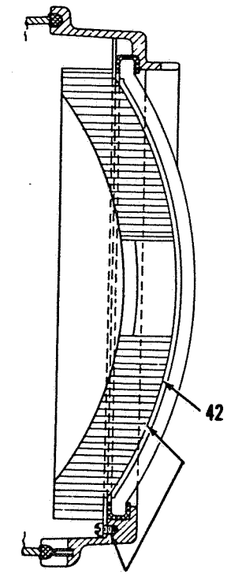

ASSEMBLE PHANKILL UNIT USING PRESENT CLIP SCREWS IN SIGNAL UNIT, WITHOUT CLIPS.

Figure 5-1C. Phankill Unit

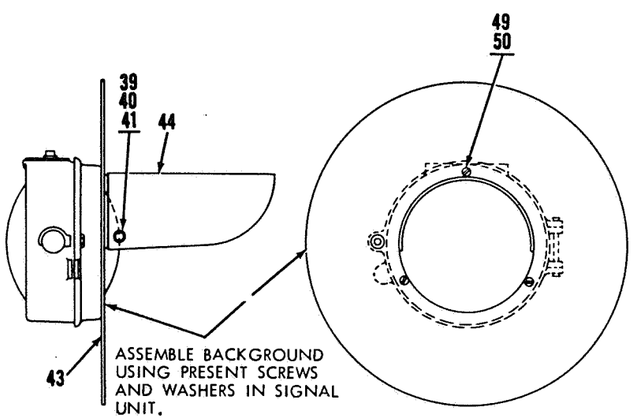

Figure 5-1A. Background

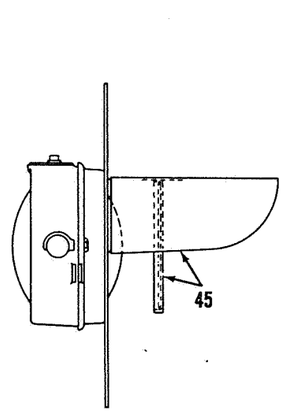

Figure 5-1B. Roundel Guard and Hood

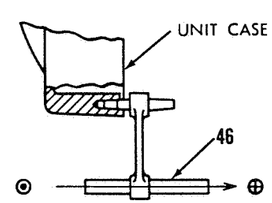

Figure 5-1D. Sighter Tube

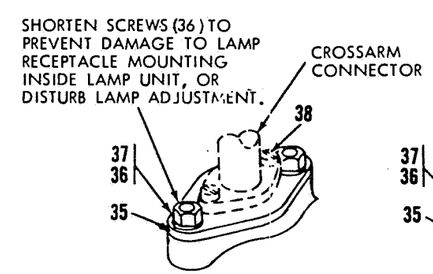

VIEW SHOWING APPLICATION OF HC-100 SIGNAL UNITS TO CROSSARMS OF SAFETRAN.

VIEW SHOWING ADAPTER FOR APPLICATION OF HC-100 SIGNAL UNITS TO CROSSARMS OF US&S AND OTHER MANUFACTURERS.

Figure 5-1E. Adapters

Figure 5-1. HC-100 Signal Unit Assembly Parts Location Diagram

SEE ATTACHED ADDENDUM

USS

SERVICE MANUAL 6047

Alignment and Maintenance

HC-120 SIGNAL UNITS

March, 1979
A-9/83-100-2050-3

UNION SWITCH & SIGNAL DIVISION
AMERICAN STANDARD INC. / SWISSVALE, PA 15218

PRINTED IN USA

SERVICE MANUAL 6047

ALIGNMENT AND MAINTENANCE

HC-120 SIGNAL UNITS

(For Installation Refer To Service Manual 6048)

TABLE OF CONTENTS

Section		Page
I	GENERAL	2
II	DESCRIPTION	2
	2.1 GENERAL	2
III	HC-120 SIGNAL UNIT INSTALLATION AND ALIGNMENT	3
	3.1 INSTALLATION (Refer to SM-6048)	3
	3.2 ALIGNMENT (REVISED SIGNAL MANUAL PART 268)	3
IV	MAINTENANCE	5
	4.1 GENERAL	5
	4.2 LAMPS	5
	4.3 CLEANING ROUNDEL & REFLECTOR	6
	4.4 DAMAGED SIGNAL UNITS	6
	4.4.1 Damaged Roundels	6
	4.4.2 Damaged Lamp Receptacles	7
	4.4.3 Cracked or Broken Reflectors	7
	4.4.4 Damaged Case or Door	7
	4.5 SHOP REPAIR & ADJUSTMENT FOR THE HC-120 SIGNAL UNIT	7
	4.5.1 Test Equipment	7
	4.5.2 Adjustment of Lamp Socket	8
	4.5.3 Reflector Replacement	9
	4.5.4 Gasket Replacement	10
V	PARTS LIST	11/12

March, 1979
A-9/83-100-2050-3

UNION SWITCH & SIGNAL DIVISION
AMERICAN STANDARD INC. / SWISSVALE, PA 15218

SECTION I

GENERAL

This service manual describes the assemblies for the HC-120 Signal Units and provides information for light unit alignment and maintenance. Complete parts list for the signal units are shown on Figure 5-1.

The HC-120 Signal Unit, illuminated area is 43% greater than with the 8-3/8" unit. The HC-120 signal unit also fits all suppliers' crossarms with standard 1-1/4" straight male pipe thread section connections.

SECTION II

DESCRIPTION

2.1 GENERAL

The HC-120 Signal Unit crossarm assemblies offer various arrangements:

a) 2-Light Units on One Crossarm.
b) 4-Light Units (back to back) on One Crossarm.
c) Type Z Cantilever, where ladder is located on road side.
d) Application to standard 4" or 5" mast with a wooden gatearm or application to a type CASWT Cantilever 10" mast where ladder is located on field side of mast light. (See application drawings Figure 5-2 through 5-5 enclosed herein and Figure 2-1 enclosed with XA-120 crossarms service manual 6048).

Light units are designed with a built-in means for alignment with the use of a sighter tube. Alignment procedures are outlined under "HC-120 Signal Unit Alignment" and "Maintenance".

SECTION III

HC-120 SIGNAL UNIT INSTALLATION AND ALIGNMENT

3.1 INSTALLATION

When installing HC-120 Signal Units to a XA-120 Crossarm, refer to Service Manual 6048 for appropriate procedure.

3.2 ALIGNMENT

Vertical adjustment should be made first with the horizontal adjustment tightly clamped so that unit wiggling does not cause a bad vertical adjustment. A sighting tube (N170622) can be used to aid in the initial adjustment. The final adjustment should be checked by an observer on the road, safely. (See Figure 1).

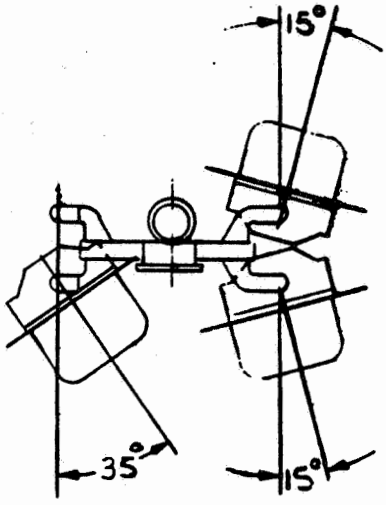

VIEW SHOWING MAX. HOR. ADJUSTMENT FOR 12" LIGHT UNIT (HC-120)

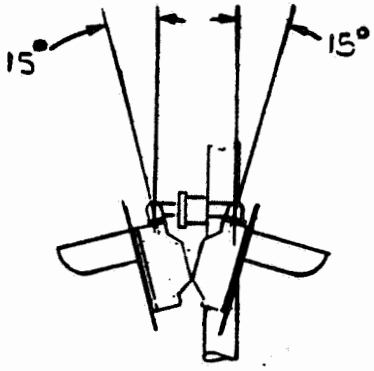

VIEW SHOWING MAX. VERT. ADJUSTMENT FOR 12" LIGHT UNIT (HC-120)

Figure 1

Maximum Adjustment Facility For HC-120 Light Units

AAR Signal Manual Part 268, 1972 Revision is repeated herein as a Guide to Signal Unit Alignment. Some sentences of manual part 228 are omitted for simplicity sake.

ALIGNING HIGHWAY CROSSING SIGNAL REFLECTOR TYPE LIGHT UNITS
(REVISED SIGNAL MANUAL PART 268)

These instructions apply to the aligning of highway crossing signal electric light units which have sealed lamp receptacles and are in accordance with Manual Part 166. They set forth general requirements representing recommended practice.

(1) The aligning of electric light units in accordance with these instructions must not be started until proper protection has been afforded for highway and pedestrian traffic. When aligning, care must be exercised that no unsafe conditions are set up.

(a) The lamp receptacles are positioned and sealed by the manufacturer, using 1/64 inch precision based lamps. To obtain the range and efficiency intended, signal precision lamps must always be used in the light units.

(b) When aligning of light units has been completed, tests must be made immediately to determine that the equipment functions as intended.

(2) Procedure is as follows:

(a) Front light units

(1) Continuously light one lamp.
(2) Open door wide so clear beam is displayed.
(3) Adjust light unit vertically to align axis of beam five feet six inches above pavement at selected alignment distance. Both lamps should be aligned to same point.
(4) Adjust light unit horizontally to align axis of beam to center of approach lame in approach to signal at selected alignment distance, maintaining vertical alignment.
(5) Tighten clamps and close door.
(6) Repeat Instructions 2-a-1 to 2-a-5, inclusive, on other front light units.

(b) Back light units where used

(1) Continuously light one lamp.
(2) Open door wide so clear beam is displayed.
(3) Adjust light unit vertically to align axis of beam five feet six inches above pavement at a point 50 ft. in approach to the signal on opposite side of track.

(4) Adjust light unit horizontally to align axis of beam to a point 50 feet with symmetric patterned roundels, 150 feet with non-symmetrical roundels in approach to the signal on opposite side of track and in center of approach lane, maintaining vertical alignment as in Instruction 2-b-3.
(5) Tighten clamps and close door.
(6) Repeat Instructions 2-b-1 to 2-b-5, inclusive on other back light units.

(c) After units have been aligned, clamps tightened and doors closed, they must be checked with lights flashing and lamps burning at recommended voltage to make certain a flashing light aspect is visible within a range of 1,000 feet.

SECTION IV

MAINTENANCE

4.1 GENERAL

Maintenance of HC-120 Signal Units generally consists of cleaning the lamps, the roundels, and the reflector surfaces and replacement of the lamp.

4.2 LAMPS

It is obvious lamps must be replaced before the end of their rated life. It is recommended that the actual "burning" time in service for lamps should not exceed 50% fo their calculated "Average Life" for the particular voltage applied to them as read on the "Voltage vs. Life Curve" Figure 1 of Instruction Pamphlet U-5737 entitled "Life Installation and Replacement of Railway Signal Lamps".

Replacement at 30% to 40% of the calculated average life is more logical; as 5% of the lamps will fail at, or before 35% of rated average life. If failure of 5% of the lamps is considered the maximum permissible during the period between renewals, it is apparent that it is necessary to replace all lamps at 35% of rated life. For further information, refer to Instruction Pamphlet U-5037.

Removal of old lamps for installation of new ones in the HC-120 Signal is accomplished easily. As the lamps are precision type, no change in adjustments will be necessary unless the signal has been damaged.

4.3 CLEANING ROUNDEL AND REFLECTOR

Crossing signals are currently equipped with plastic roundels and glass reflectors. Usually the glass surfaces can be cleaned with a moist cloth to remove the accumulation of dust, etc. and the surfaces wiped dry with a clean dry cloth.

Plastic roundels require a different type of cleaning procedure. Use the method outlined in the following:

1. Flush the roundel surfaces with clean water, using a chamois or soft cloth.

2. To remove oil or grease, use one of the current household laundry detergents with water and a clean chamois, soft cloth or sponge free of dirt, grit, etc. DO NOT USE ANY SOLVENT such as alcohol, gasoline, kerosene, carbon tetrachloride or kitchen scouring compound at any time.

3. Rinse thoroughly with clean water.

4. Dry the cleaned surface with a clean cloth that is devoid of grit or dirt.

4.4 DAMAGED SIGNAL UNITS

Damaged signal units fall into one of four classifications:

a) Damaged roundel.
b) Damaged roundel and damaged lamp receptacle.
c) Damaged roundel, damaged lamp receptacle, and cracked or broken reflectors.
d) Damaged case, door and other parts.

4.4.1 Damaged Roundel

A damaged roundel can be replaced and the signal restored to service after an inspection shows the lamp receptacle adjustment has not been disturbed. First, replace the damaged roundel. If the gasket has not been damaged, it may be reused. It is advisable, however, when replacing a roundel that has been in service for several years to check the old gasket carefully and replace any obviously aged or questionable gaskets to avoid possible leakage troubles in the future.

When the new roundel has been installed, insert the sighting tube into the sighter socket in the case and check the signal unit for proper beam alignment on the highway approach. After the signal beam has been checked to agree with the sighter, observe the indication from the roundel. Signal units that do not produce a satisfactory alignment should be re-aligned as outlined in this manual.

4.4.2 Damaged Lamp Receptacles

Damaged lamp receptacles may not be visually evident. Changing or adjusting the lamp receptacle in the field is not recommended. The unit should be shopped to bring the alignment of sighter and light beam into agreement, otherwise the misalignment of the light beam will provide alignment difficulties in the future.

4.4.3 Cracked or Broken Reflectors

Cracked or broken reflectors should not be replaced in the field. Instead, the unit should be replaced and returned to the repair shop for replacement of reflector and readjustment of the lamp receptacle to assure most efficient output and proper alignment.

4.4.4 Damaged Case or Door

A damaged case, door, or other parts generally result in broken reflector, misplacement of lamp receptacle with attendant misalignment or the indication, reduction in efficiency or all of these troubles, and therefore shop repairs are required.

4.5 SHOP REPAIR AND ADJUSTMENT FOR THE HC-120 SIGNAL UNIT

The signal unit should be returned to the repair shop for replacement of damaged or broken parts and then socket re-adjustment and beam alignment, with the sighter, should be made in a suitable dark room.

4.5.1 Test Equipment

Test Equipment required for adjusting crossing signal units is as follows: (See Figure 4-1).

a) A suitable adjustable test stand for supporting the signal unit firmly in position. This should be a fixture which terminates in such a way as to accept the standard mounting elbow and allow for horizontal and vertical adjustment.

b) The test stand should be located 50 feet from a vertical flat white screen.

c) On the flat white screen, locate a beam target at the same height as the signal axis as shown in Figure 4-1.

d) Place a small filament lamp at the location of the sighter target illustrated in Figure 4-1. This lamp may be in front of the screen or located behind a 1/2" diameter hole through the screen.

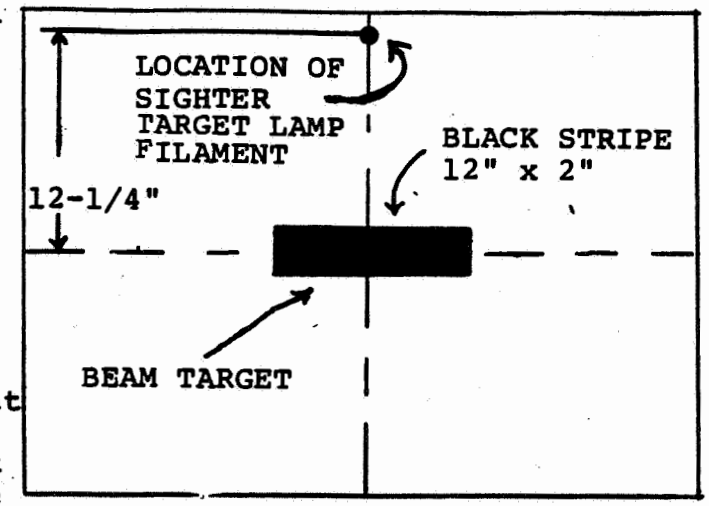

Figure 4-1.
Location of Screen Targets

e) Use a standard Precision base test lamp for setting the lamp receptacle.

f) Sighting tube accuracy can be checked readily by the following method: Mount a sighter socket (tapered) in a fixed position so that the sighter is aligned on a prominent object approximately 1/2 mile away. Rotate the sighter 180° in the socket and check the new sighting point of the cross hairs. If the new sighting position coincides with the original sighting on the distant object, the sighter is satisfactory. If it is not satisfactory, replace the sighter with one which is accurate and have the defective sighter corrected before it is used again to adjust or to align signals.

4.5.2 Adjustment of Lamp Socket

Mount the signal unit in the test stand located 50 feet from the flat white screen. Open the signal unit door for access to the Lamp Receptacle and its mounting.

Insert the sighter (N170622) in the sighter socket which is in the cover fasten block on the case, and place the tube of the sighter as close to the vertical centerline of the siganl as convenient. Now adjust the signal unit on the test stand until the cross hairs of the sighter have the lighted target Lamp Filament sighted in. Clamp the signal unit solidly in the aligned position.

Now center a 60 watt light source (60 watt Frosted Light Bulb) on the center of the target on the white wall. Place bulb alignment tool (N451498-0701) in the socket.

Dim or turn off the lights in the room, and light the 60 watt light source. Move the light bulb socket and bracket in the 3 directions of travel allowed by; the slotted bracket, bracket slip joint between bracket and socket, and shims until a distinct focused point of light is centered on the center dot of the bulb alignment tool.

NOTE: Frosted side of bulb alignment tool should face toward the reflector.

Tighten fasteners while maintaining focus. Now replace bulb alignment tool with light bulb, apply power and check light pattern.

After satisfactory adjustment has been obtained, close the signal unit door and check the appearance of the indication on the red roundel to provide a completely illuminated or well filled roundel with no dark spots.

4.5.3 Reflector Replacement

Reflector Removal

In the event of reflector breakage, which is highly unlikely due to the shock absorbing mounting system used for the reflector, carefully remove all pieces of the reflector, RTV adhesive and the sponge rubber mounting pads. Needle nose pliers, a pocket knife, and a screwdriver are useful tools for reflector removal. The reflector rests on 5 sponge rubber pads, one of which is at the very bottom of the reflector and the other four symmetrically located on the side of the reflector. The pads are 2" long and the long axis of said pads is directed radially. RTV adhesive is used generously between the reflector and the case. The pad is held with pressure sensitive adhesive to the case. RTV adhesive is used only on the four radially directed pads and is not needed on the bottom pad.

Special care should be exercised in the handling of the glass reflector or broken parts thereof to prevent injury from pieces of broken glass. Use of gloves and eye protection is recommended.

New Reflector Installation

(1) Check that case inside surfaces are free of adhesive.
(2) Wipe inside of case with paper towel, damp with suitable solvent (alcohol, acetone) being very careful not to get any solvents or fumes thereof on the roundel.
(3) Remove protective backing from pieces of rubber pads and stick in place per drawing after case is fully dry after step (2). (Order one foot of UA-750068 for each signal to be repaired).

(4) Apply a generous amount of RTV (UA41552) adhesive sealant, approximately 1 teaspoon, on top and along side of each of four rubber pads so as to maximize reflector, pad, case adhesive contact.

(5) Put clean reflector in place and push down on reflector so as to spread the adhesive and then either manually or with the aid of the reflector positioning tool, UN451498-1001 carefully position the reflector so that in actual operation the parallel light rays coming from the reflector are parallel with the axis of the sight tube and in alignment with the roundel.

(a) If reflector positioning tool is not available, use a suitable measuring device to cause any point on the edge of the glass reflector to be equidistant to any point on the edge of the case directly above the point on the reflector. See Figure 5-1.

(b) If reflector positioning tool is available, use as follows:

(1) With tool sitting squarely on the edge of the case, gently allow central part to slide toward the reflector. Feet on the central part and its weight will cause the reflector to be pushed into proper alignment.

4.5.4 Gasket Replacement

Both the case to cover gasket UJ470070 and the roundel to cover gasket UJ470069 are held in place with a solvent activated adhesive. To replace gasket remove all old gasket and clean surface new gasket is to stick to. Cut new gasket to exact length. With small paint brush, coat adhesive side of gasket generously with methyl ethyl ketone (MEK) UA41434. Press gasket into place immediately. Allow adhesive one hour to cure.

SECTION V

PARTS LIST

Drawing R451497 sh. 1, Rev. 12

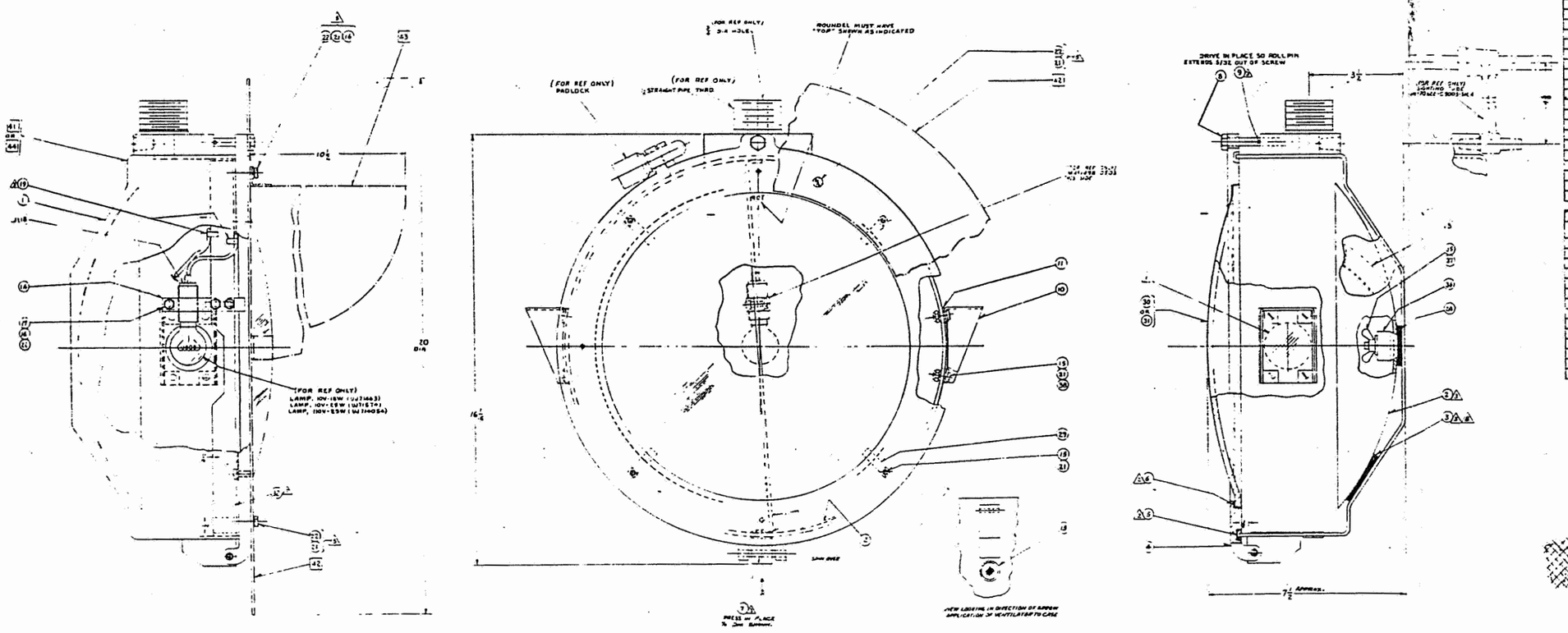

NOTES

1. APPLY CONTINUOUS 1/8 INCH FILLET OF RTV ADHESIVE, (ITEM 33) TO THE SIDE LIGHT IN ROW-CASE 1/4 HOLE INTERFACE AFTER ASSEMBLY OF HOOD & WINDOW TO CASE.
2. TO INSTALL COVER GASKET AND ROUNDEL GASKET TO COVER. CUT GASKET TO LENGTH TO GIVE BUTT JOINT WITH NO MORE THAN 1/16 INCH GAP. APPLY CEMENT U4-480 TO GASKET GROOVE OF COVER WITH BRUSH OR SWAB. ASSEMBLE GASKET TO COVER, POSITIONING BUTT AT BOTTOM OF COVER CASTING.
3. ASSEMBLE PER SPEC. EU-6444.
4. PLACE HOOD & BACKGROUND MOUNTING HARDWARE (2-#10 SS BOLS, 5-#10 LK WASHERS & 3 #10 PLATE WASHERS) IN PAPER ENVELOPE & TAPE TO INSIDE OF SIGNAL CASE.
5. PLACE FOLDED BLUE LINE PRINT OF INSTRUCTION SHEET, ITEM 27, INSIDE OF SIGNAL.
6. LOCATE SIGNAL NAME PLATE IN APPROX. THE POSITION SHOWN & RUBBER STAMP 1/2 HIGH CHARACTERS (MIL-STD-1223A, & SUFFIX PER TABLE USING S-P-1 INK US 240.23
7. PLACE TOP EDGE OF RUBBER STRIP AT TANGENT POINT OF RADIUS SEE DETAIL "X"

GROUP									
								01	SIGNAL, HC-120
		-0103 QTY	-0101 QTY	ITEM NO.	PART NO.	DWG	SH.	DESCRIPTION
			1	1	[illegible]	R451498		01	CASE
		1	1	2	[illegible]	R532137		01	REFLECTOR
		3.555	3.555	3	1875068				RUBBER 3 PCS 2 IN. LG.
			1	4	[illegible]	R451498		01	COVER
			1	5	1470070				RUBBER (some in cover)
		1	1	6	1470269				RUBBER (some in cover)
		1	1	7	1987335				ROLL PIN (HINGE)
			1	8	7453933	B35039		21	SCREW, 1/4-18
			1	9	1487693				ROLL PIN
		2	2	10	[illegible]	R451498		04	HOOD, SIDE
		2	2	11	[illegible]	R451498		02	WINDOW
			1	12	[illegible]	1845-523		-21	INSTRUCTION
		1	1	13	[illegible]	7318		113	VENTILATOR
		1	1	14	[illegible]	R451498		03	CLAMP, SOC (WELDMENT)
		12	12	16	[illegible]	R507256		01	SCR. 10-32 X 1/2 PAN HST
		8	8	16	[illegible]	R451201		01	WASH. 10-PLATE SST
		3	3	17	[illegible]				NUT, 10-32 SST ELASTIC
		1	1	18	[illegible]	R451498		12	SOCKET, LAMP
		4	4	19	[illegible]				CLIP, LEAD
				20					
		17	17	21	[illegible]	R451221		01	WASH. 10 LK SST
		8	8	22	[illegible]	R507256		01	SCR. 10-32 X 1/2 PAN HST
				23					
		1	1	24	[illegible]	R451451		03	WASHER SPRING [illegible]
				25					
				26					
		1	1	27		R451223	01	02	INSTR. TO INSIDE SH. 5 & 11
				28					
		4	4	29	[illegible]	B35041		2	CLIP, (ROUNDEL REF)
		—	1	30	[illegible]				ROW-ROUNDEL, 12 IN (30"x32"x1/2")
			—	31	[illegible]				ROUNDEL, 12 IN (30"x18")
		1	1	32	[illegible]	R451108		04	NAME PLATE
		[illegible]	[illegible]	33	[illegible]				RTV-732 WHITE
				34					
		1	1	35	[illegible]				NUT, 1/4-20 ELAS STP WING
		1	1	36	[illegible]	R451498		16	PLUG, REFL CENTERING
		1	1	37	[illegible]				WASHER, 1/4 PL
		3	6	38	[illegible]	[illegible]		01	NUT-10-32 HEX SST
				39					
				40					

GROUP									
						R451498		01	SIG, WITH HOOD & BACKGRD
		-0104 QTY	-0102 QTY	ITEM NO.	PART NO.	DWG	SH.		DESCRIPTION
		—	1	41	[illegible]	R451497		01	SIGNAL, HC-120
			1	42	[illegible]	R451498		06	BACKGROUND
			1	43	[illegible]	R451498		02	HOOD, FRONT
			1	—	[illegible]	R451497		01	SIGNAL, HC-120

Figure 5-1. HC-120 Signal Unit Parts Location Diagram

Drawing F451506 sh. 1, Rev. 8

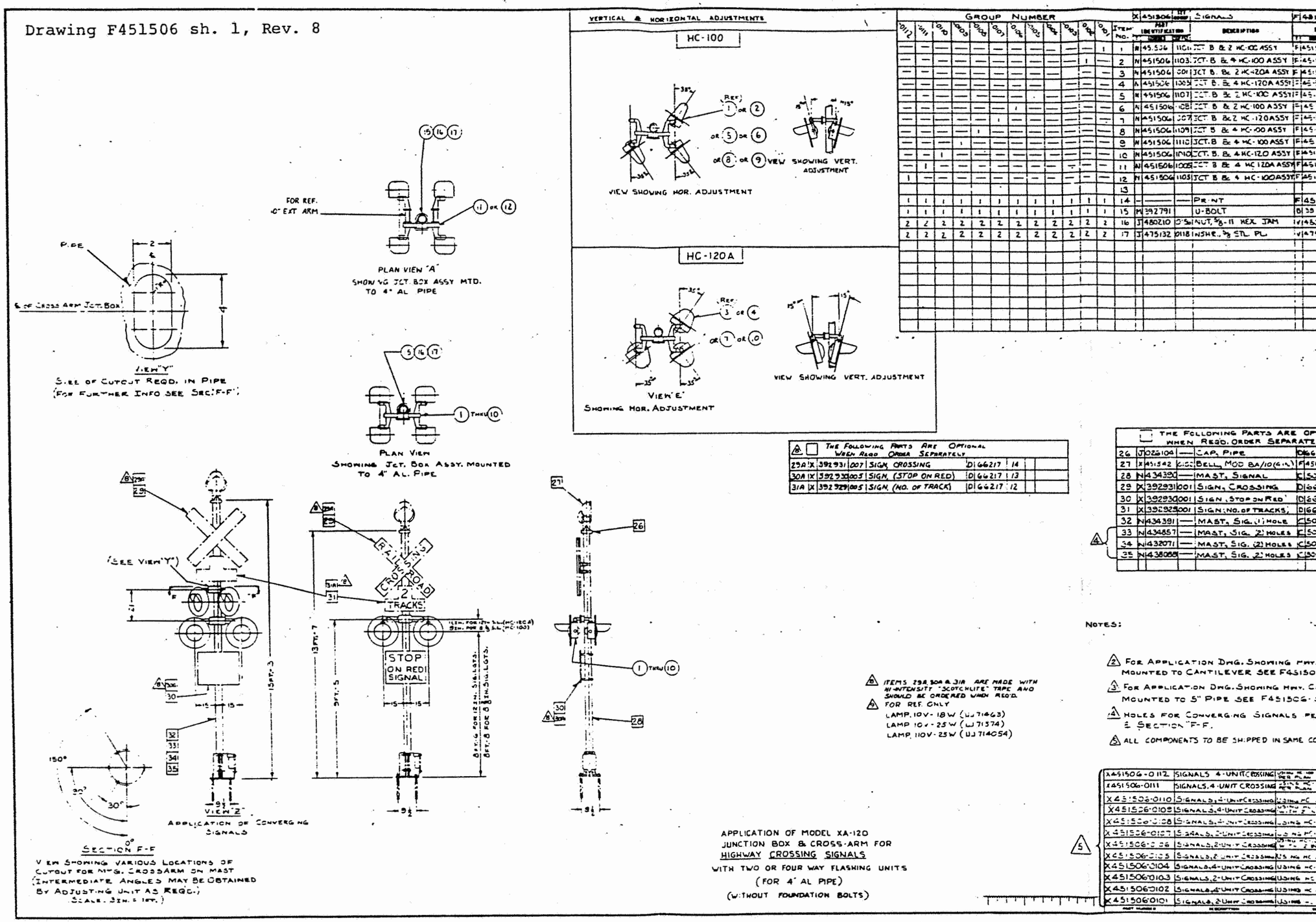

| GROUP NUMBER | | |

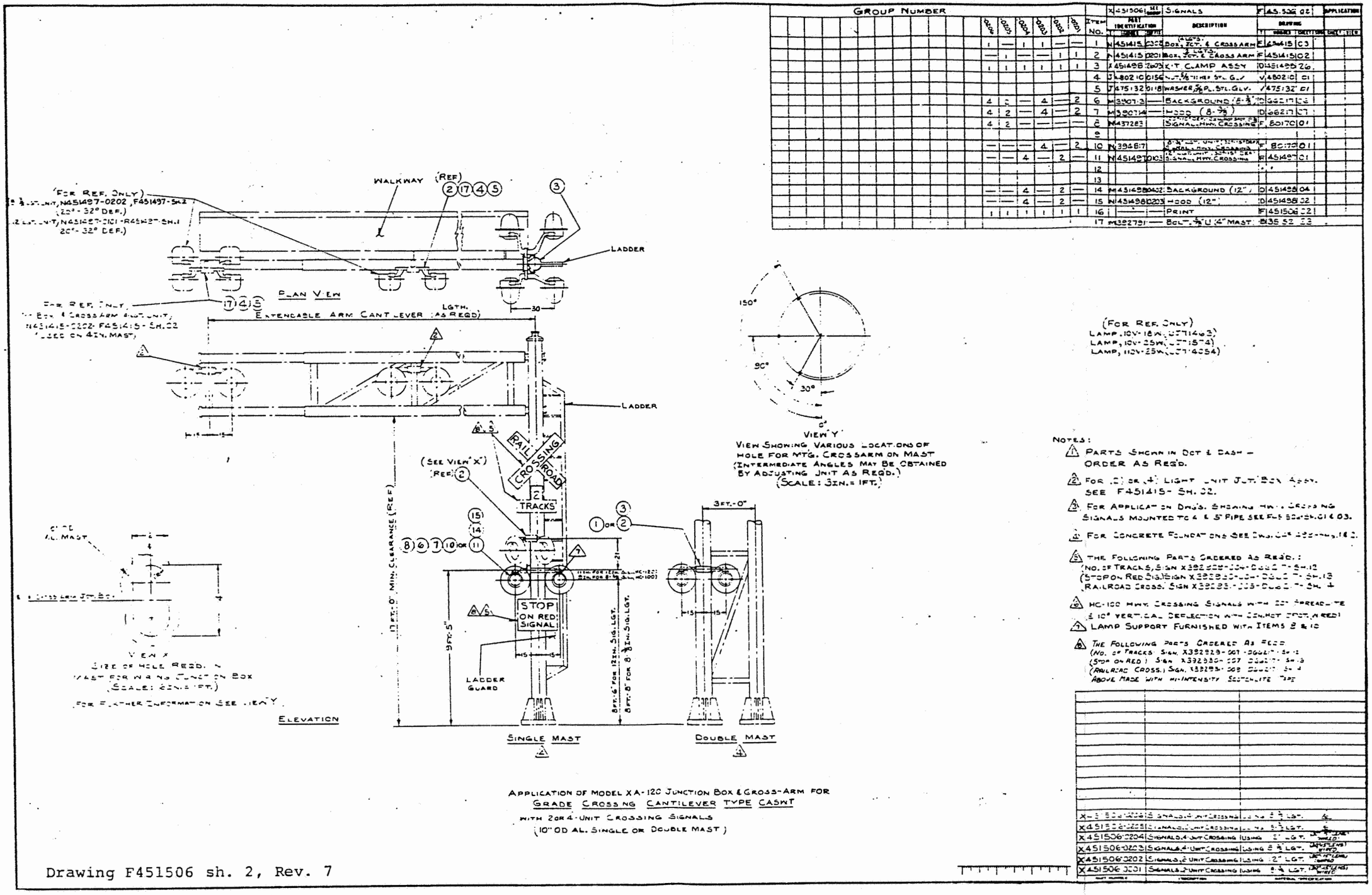

Drawing F451506 sh. 2, Rev. 7

Figure 5-3. HC-120 Application Drawing

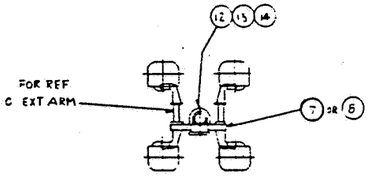

PLAN VIEW "A"
SHOWING JCT. BOX ASS'Y MOUNTED
TO 5" PIPE

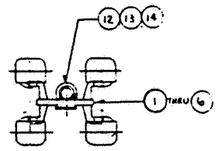

PLAN VIEW
SHOWING JCT. BOX ASSY. MOUNTED
TO 5" PIPE

VERTICAL & HORIZONTAL ADJUSTMENTS

HC-100

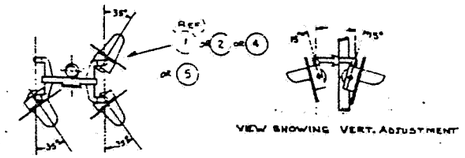

VIEW SHOWING HOR. ADJUSTMENT

VIEW SHOWING VERT. ADJUSTMENT

HC-120A

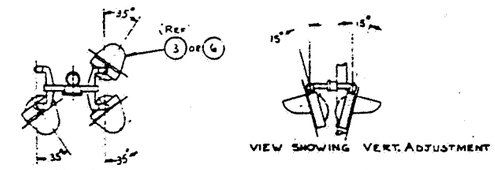

VIEW "E"
SHOWING HOR. ADJUSTMENT

VIEW SHOWING VERT. ADJUSTMENT

GROUP NUMBER								ITEM NO.	PART IDENTIFICATION NUMBER		DESCRIPTION	F	DRAWING NUMBER	SHEET	SIZE	APPLICATION
X45.506-0308	X45.506-0307	X45.506-0306	X45.506-0305	X45.506-0304	X45.506-0303	X45.506-0302	X45.506-0301			SEE GROUP	SIGNALS		F451506-031			
—	—	—	—	—	—	—	1	1	N451506	1101	JCT. B. & 2 HC-100 ASSY	F	451506 11			
—	—	—	—	—	—	1	—	2	N451506	1108	JCT. B. & 2 HC-100 ASSY	F	451506 11			
—	—	—	—	—	1	—	—	3	N451506	1001	JCT. B. & 2 HC-120A ASSY	F	451506 10			
—	—	—	—	1	—	—	—	4	N451506	1103	JCT B & 4 HC-100 ASSY	F	451506 11			
—	—	—	1	—	—	—	—	5	N451506	1110	JCT B & 4 HC-100 ASSY	F	451506 11			
—	—	1	—	—	—	—	—	6	N451506	1003	JCT B & 4 HC-120A ASSY	F	451506 10			
1	—	—	—	—	—	—	—	7	N451506	1005	JCT B & 4 HC-120A ASSY	F	451506 10			
—	1	—	—	—	—	—	—	8	N451506	1105	JCT. B & 4 HC-100 ASSY	F	451506			
								9								
								10								
1	1	1	1	1	1	1	1	11	—	—	PRINT	F	F451506-03			
1	1	1	1	1	1	1	1	12	M397808		U-BOLT	B	35152 125			
2	2	2	2	2	2	2	2	13	J480210	0156	NUT, 5/8-11 HEX JAM	V	480210 01			
2	2	2	2	2	2	2	2	14	J475132	0118	WSHR., 5/8 STL PL	V	475132 01			

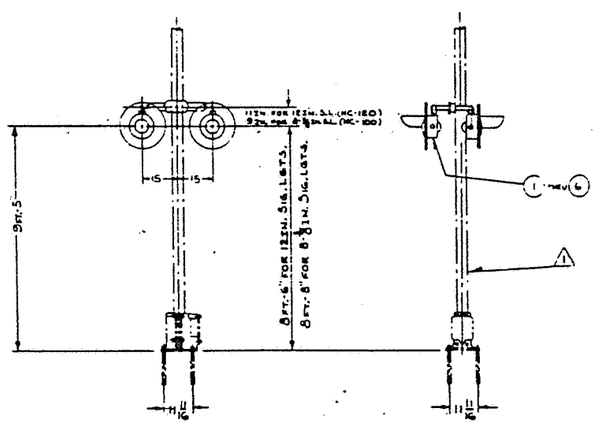

NOTES:

1. PARTS SHOWN IN DOT & DASH INDICATES CUSTOMERS EQUIPMENT.
2. FOR APPLICATION DWG. SHOWING HWY. CROSS. SIGNALS MOUNTED TO 4" PIPE SEE F451506-SH.02.
3. FOR APPLICATION DWG. SHOWING HWY. CROSS. SIGNALS MOUNTED TO CANTILEVER SEE F45.506-SH.07
4. FOR REF ONLY:
   LAMP, 6V-8W (U.L. 7463)
   LAMP 6V-25W (U.L. 574)
   LAMP, 110V-25W (U.L. 714054)
5. ALL COMPONENTS TO BE SHIPPED IN SAME CONTAINER

X451506-0308	SIGNALS 4-UNIT CROSSING	USING HC-100 (30°-5° LENS) PER PLAN VIEW A
X451506-0307	SIGNALS 4-UNIT CROSSING	USING HC-120A (30°-5° LENS) PER PLAN VIEW A
X45-506-0306	SIGNALS, 4-UNIT CROSSING	USING HC-120A 30°-15° LENS
X451506-0305	SIGNALS, 4-UNIT CROSSING	USING HC-100 30°-5° LENS WITH 2 INCH HOT SPOT
X45-506-0304	SIGNALS 4-UNIT CROSSING	USING HC-100 30°-5° LENS
X451506-0303	SIGNALS, 2-UNIT CROSSING	USING HC-120A 30°-5° LENS
X45-506-0302	SIGNALS 2-UNIT CROSSING	USING HC-100 30°-5° LENS WITH 2 INCH HOT SPOT
X451506-0301	SIGNALS 3-UNIT CROSSING	USING HC-100 (30°-5° LENS)

APPLICATION OF MODEL XA-120
JUNCTION BOX & CROSS-ARM FOR
HIGHWAY CROSSING SIGNALS
WITH TWO OR FOUR WAY FLASHING UNITS
(FOR 5" PIPE)
(WITHOUT FOUNDATION BOLTS)

Drawing F451506 sh. 3, Rev. 7

Figure 5-4. HC-120 Application Drawing

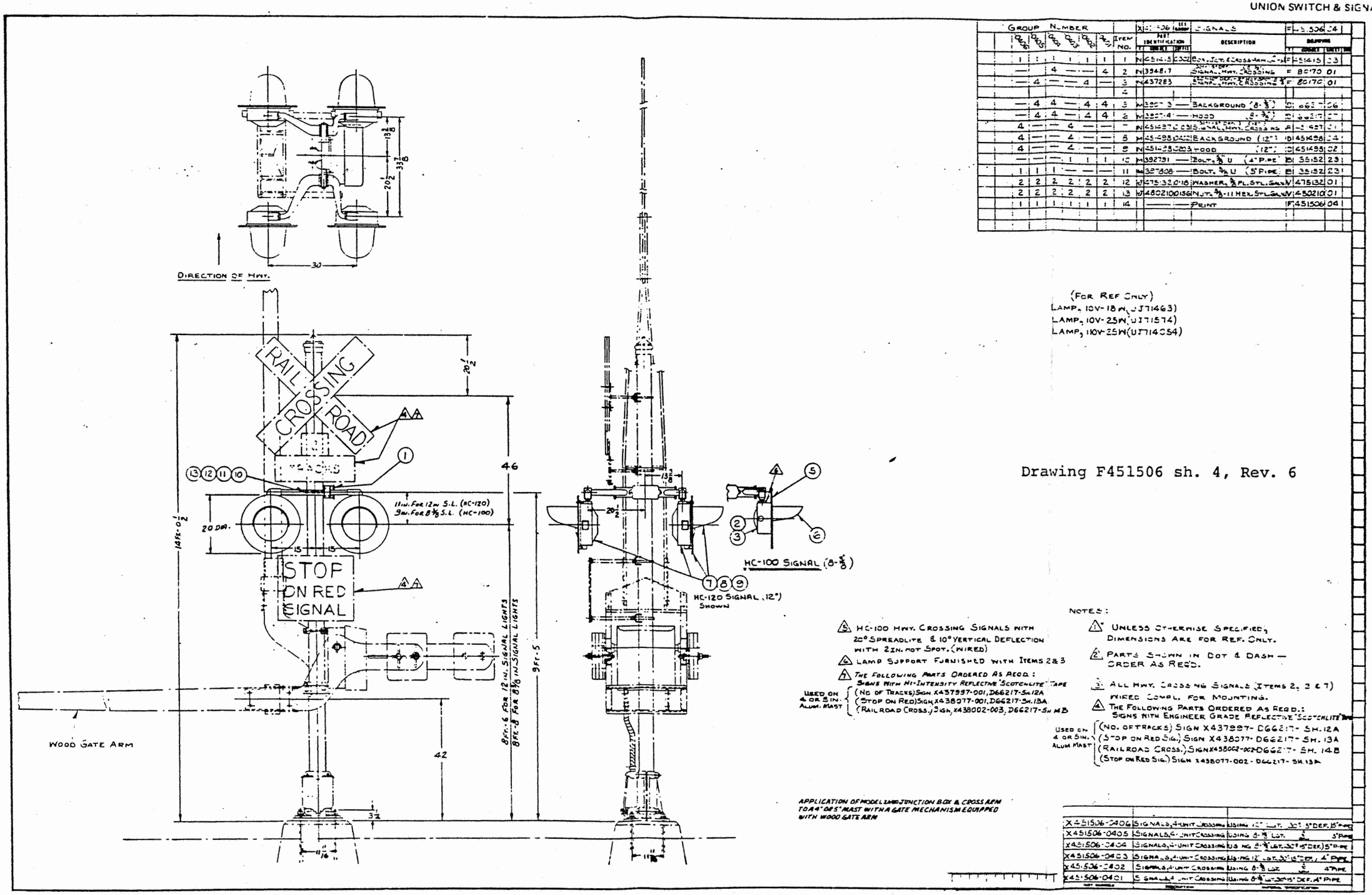

Figure 5-5. HC-120 Application Drawing

SERVICE MANUAL 6047
Addendum 1

Alignment and Maintenance

HC-120 SIGNAL UNITS

This Addendum is furnished to update all service manuals 6047 dated March, 1979.

The corrections on Figure 5-2, p. 15/16 and Figure 5-3, p. 17/18 (shown on reverse side) may be written into existing copies of this manual.

This correction will provide adequate clearance for signals using 24-inch backgrounds in a 90 Degree converging application.

January, 1986
A-1/86-50-2050-AD1

UNION SWITCH & SIGNAL DIVISION
AMERICAN STANDARD INC / PITTSBURGH, PA 15237

PRINTED IN USA

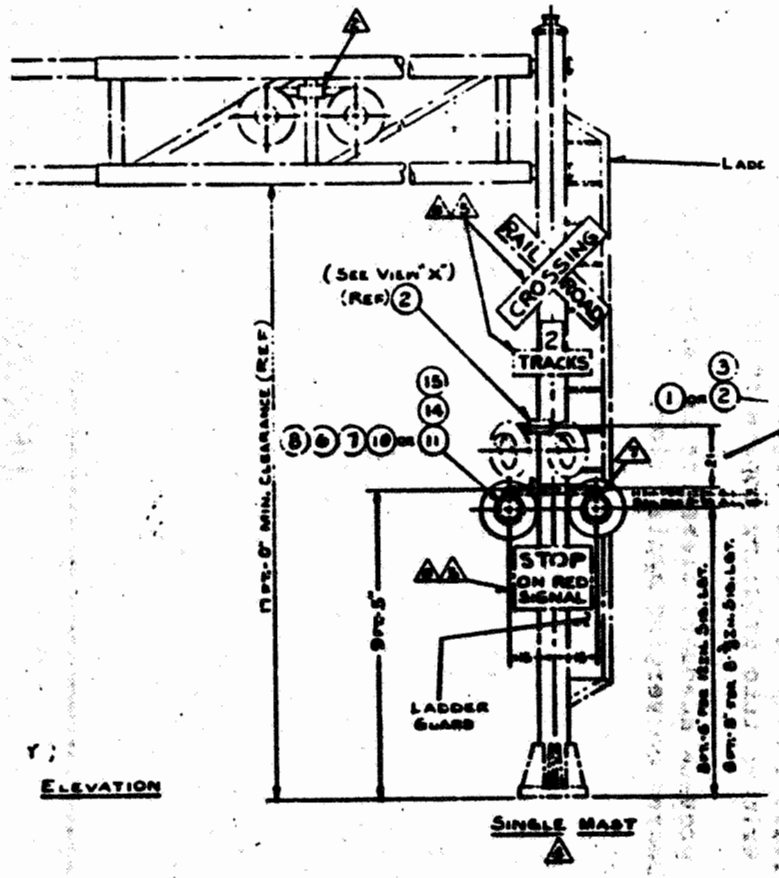

APPLICATION OF MODEL XA-1
GRADE CROSSING S
WITH 2OR4-UNIT CROSSIN
(10" OD AL. SINGLE OR

Figure 5-3

CHANGE TO 24

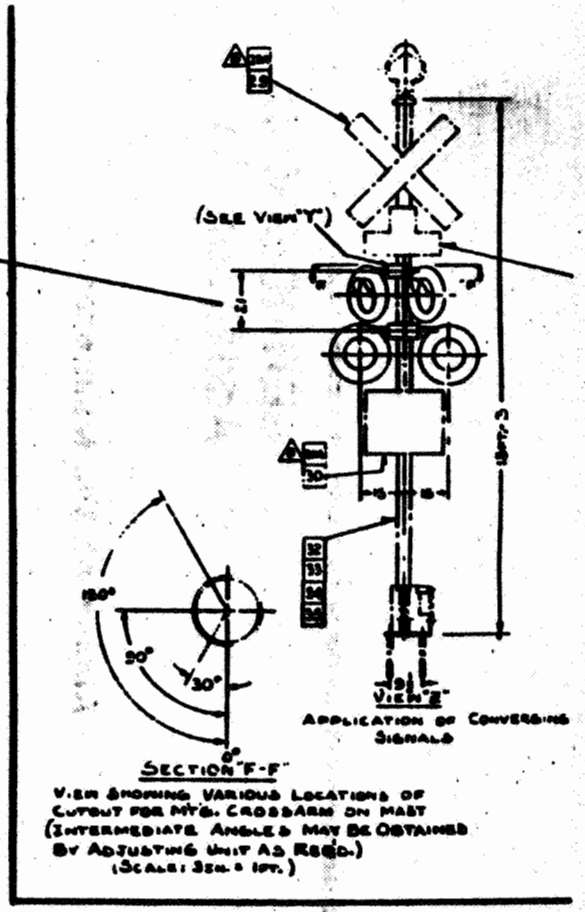

Figure 5-2

UNION SWITCH & SIGNAL

SERVICE MANUAL 6048

Installation and Maintenance

JUNCTION BOX CROSS ARMS
XA-120

April, 1982
D-5/85-150-2051-5

PRINTED IN USA

UNION SWITCH & SIGNAL DIVISION
AMERICAN STANDARD INC. / SWISSVALE, PA 15218

CONTENTS

Section		Page
I	GENERAL INFORMATION	1
	1.1 DESCRIPTION	1
	1.2 APPLICATION	1
II	INSTALLATION AND ALIGNMENT	3
	2.1 INSTALLATION	3
	2.2 ADAPTABILITY	4
APPENDIX		

ILLUSTRATIONS

Figure 1.	2 - Light Units On One Crossarm	1
Figure 2.	4 - Light Units (Back-to-Back) On One Crossarm	1
Figure 3.	Cantilever, Ladder Located on Road Side	2
Figure 4.	Wiring Diagrams	4
Figure 5.	Standard Adapter	5/6

SECTION I
GENERAL INFORMATION

1.1 DESCRIPTION

This service manual describes the junction box assemblies for the HC-100 and HC-120 Signal Units. The HC-100 Signal Units are furnished with an attached adapter for mounting to the XA-120 crossarm. A complete parts list for the XA-120 combined junction box crossarm assemblies is shown in Figure A-1.

1.2 APPLICATION

The XA-120 junction box crossarm assemblies offer various arrangements:

(a) 2 - Light Units on one crossarm (see Figure 1).

(b) 4 - Light Units (back-to-back) on one crossarm (see Figure 2).

(c) Cantilever, where ladder is located on road side (see Figure 3).

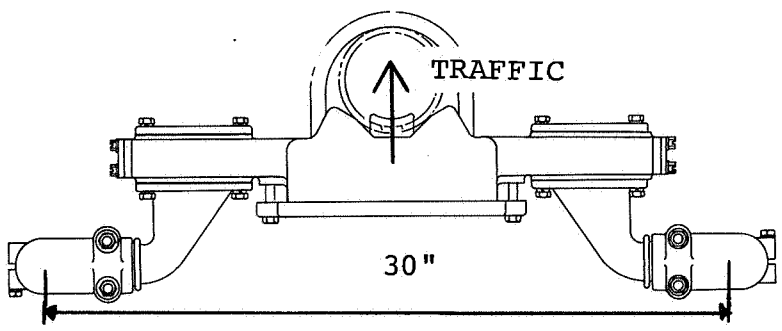

Figure 1. 2 - Light Units On One Crossarm

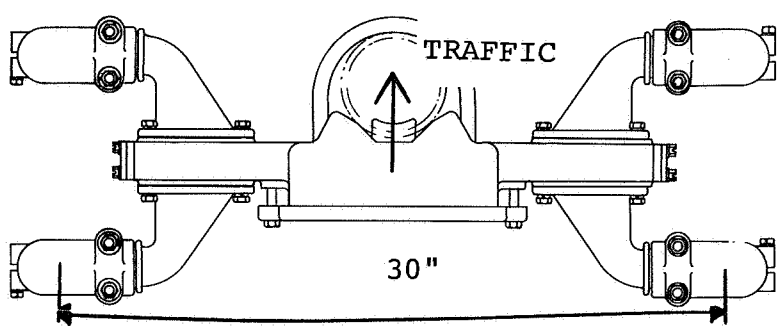

Figure 2. 4 - Light Units (Back-to-Back) On One Crossarm

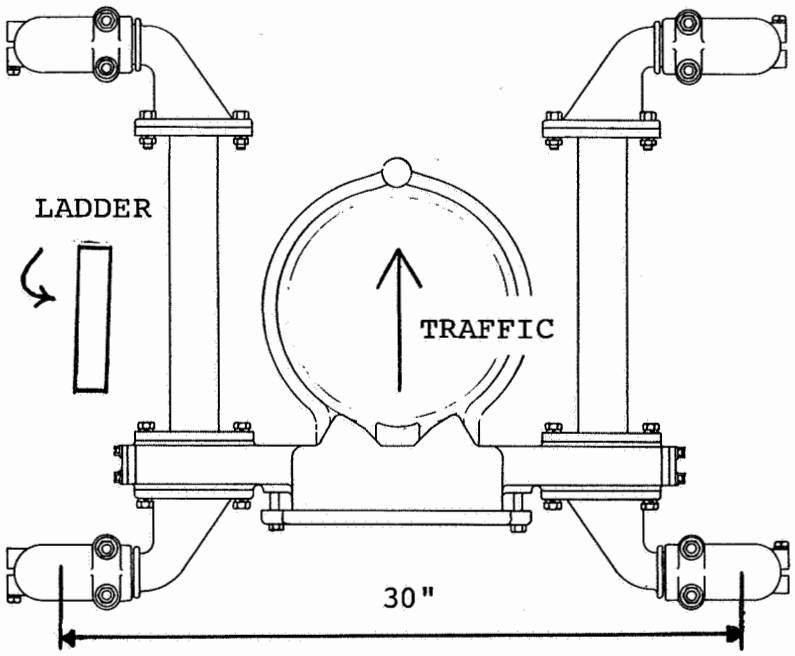

Figure 3. Cantilever, Ladder Located on Road Side

SECTION II
INSTALLATION AND ALIGNMENT

2.1 INSTALLATION

When installing signal units to a XA-120 Highway Crossing Crossarm use the following procedure:

(1) Attach XA-120 crossarm to pre-slotted mast. Torque U-bolt to 70-90 ft. lbs.

(2) Wire control cable to XA-120 crossarm junction box.

(3) Attach elbows to signal units. Signal units should not have background or hood attached yet.

NOTE

Threaded aluminum parts, 1-1/4" pipe thread and 3/8" bolt thread on crossarm elbow, #10-32 threads in signal unit cover for hood and background fasteners, and the 3/8" threaded hole for the cover close screw, should have an appropriate anti-seize lubricant applied to them at time of assembly.

(4) String signal lamp pigtail leads through elbow.

(5) If extension arms need to be attached, signal light brackets must be removed from junction box assembly. Remove the four screw nuts and washers that secure the signal light brackets to junction box assembly. Brackets can now be removed. Align the four holes in the extension arm cover plate with the holes in the junction box assembly, making sure that the gasket is between these two pieces. Install the four screws.

Slide gasket and signal light bracket or an extension arm (whichever is required) onto the screws. Install the four washers and nuts.

Remaining brackets must now be installed. Align the four holes in the cover plate of signal light bracket with the holes in extension arm cover plate. Make sure gasket is between these two pieces and install screws, washers, and nuts.

At this point, it is best to have arranged a fish wire or fish string through the crossarm and any extensions there might be so that the signal unit with elbow attached can be assembled to the remaining part of the crossarm unit as the fish wire is tied to the lamp pigtail and pulled through to the junction box.

(6) Attach fish lead to lamp pigtail and pull through pigtail to junction box.

(7) Attach elbow/signal unit subassembly to appropriate extension arm, making certain that round weather seal gasket is in place.

(8) Appropriately attach pigtail leads to terminal block. (See wiring diagram, Figure 4).

(9) If crossarm end plates have been removed to aid in wiring, now make sure that they are securely replaced.

(10) Now proceed to align the signal units. Refer to Service Manual 5893 for the HC-100 signal unit alignment procedure or Service Manual 6047 for the HC-120 signal unit alignment procedure, whichever is appropriate.

(11) Torque on 3/8" U-bolt nuts of the crossarm elbows should be 15-20 ft./lbs. Torque on 3/8" bolt which hold junction box door should be 8-13 ft./lbs.

(12) Assemble background and hood to each signal unit. Torque #10-32 screws which hold background and hood in place to 1-2 foot/lbs.

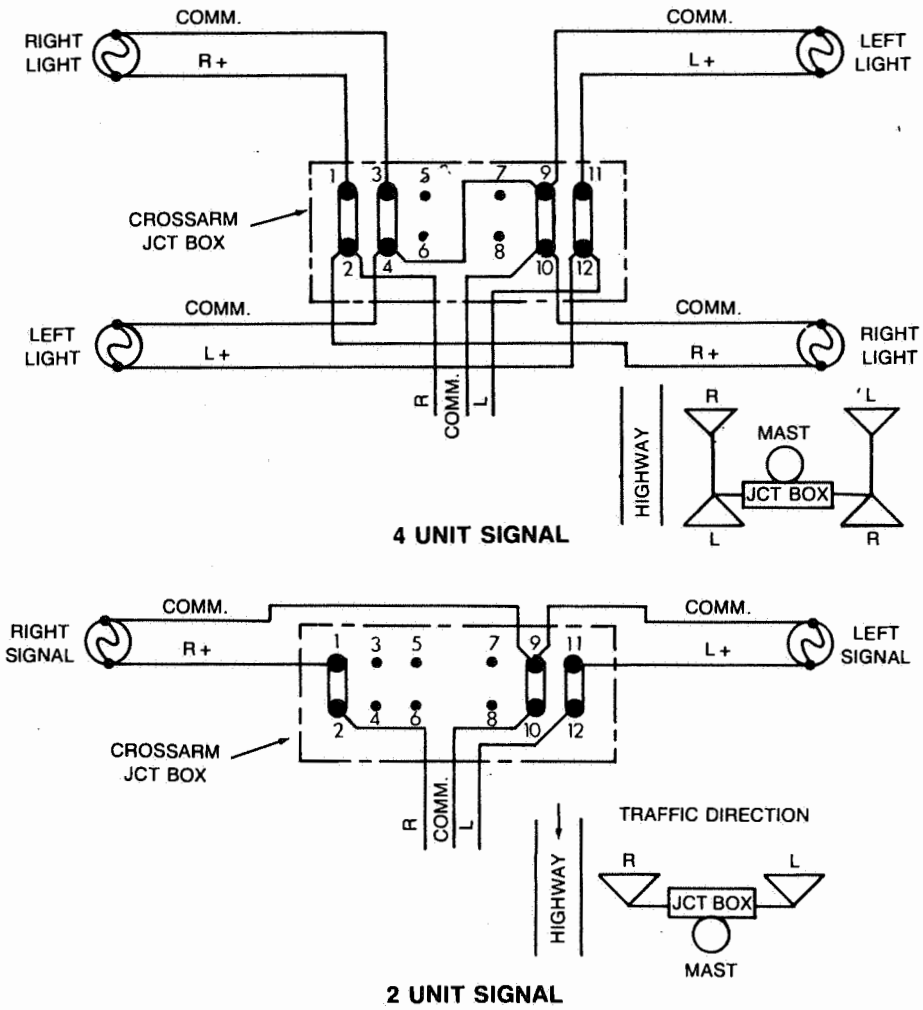

Figure 4. Wiring Diagrams

2.2 ADAPTABILITY (To earlier WABCO signal units, and units of other manufacturers)

The XA-120 crossarm accepts any highway crossing signal unit equipped with the standard 1-1/4" NPT connector.

Figure 3-2 shows the standard adaptor (Part No. M451416-0104) required for installing WABCO style HC-100 (units are furnished with this adapter attached) and HC-81 signal units to the XA-120 crossarm.

NOTE

When adapting steel highway crossing signal units to aluminum XA-120 crossarms, caution must be used to prevent galvanic reaction between the two dissimilar metals. This may be implemented simply by applying a coat of flat black enamel on both the bottom surface of the aluminum adaptor and the top surface of contact with the steel highway crossing signal unit, and allowing paint to dry, prior to assembly.

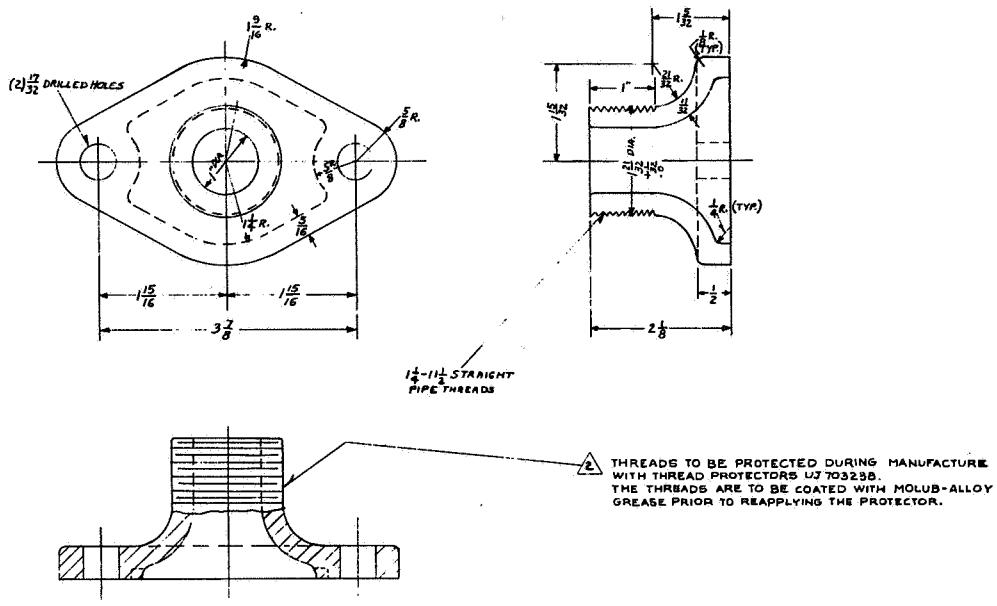

Figure 5. Standard Adapter

APPENDIX A
SERVICE MANUAL 6048

PARTS LIST
FOR
XA-120 CROSSARMS

JCT. BOX & CROSS ARM (ITEMS SHOWN ◯)

PART NO. COMPL.	ASSEMBLE AS SHOWN WITH BRACKETS	QTY. OF SIGNAL LIGHT BRACKETS	ITEMS PER GROUP	REMARKS	REPLACES F451415	SH.
N451415-0701	"D"	2	1		N451415-0201	02
N451415-0702	"D" & "E"	4	2		N451415-0202	02
N451415-0709	"D" & "E"	4	3	FOR SOUTHERN PACIFIC (PER VIEW "Z")	N451415-0503	05

1. ON GROUP 1, USE COVER PLATE (12), IN PLACE OF BRACKET (4) AS INDICATED IN TAB.
2. COAT THREADS OF ELBOW (3) WITH DRY FILM LUBICANT J041703.
3. USE JCT. BOX & CROSSARM WITH PART NO. J026110-"A" FOR ALL ASSEMBLIES SHOWN ON THIS DWG.
4. PLACE BAG OF TAGS (18) & FOLDED BLUELINE PRINT OF INSTRUCTION SHEET (19) INSIDE OF JUNCTION BOX.
5. CEMENT RUBBER GASKET (20) TO COVER (9) WITH ADHESIVE, SPEC. M-7463 (UA41490)
6. FOR 2-UNIT, WITHOUT BRACKETS "E" & EXTENSIONS [31].
7. FURNISHED WITH EXTENSIONS [32]. DIMENSIONS 18 & 32 CHANGE TO 24 & 38 RESP.

SBM JCT. BOX & CROSS ARM COMPL. WITH "U" BOLT OR MTG. STRAP (ITEMS SHOWN □)

SBM COMPL. WITH MTG. HDW	ASSEMBLE AS SHOWN	ITEMS PER GROUP	MAST SIZE	JCT. BOX & CROSS ARM 25 PART NO.	QTY. OF SIGNAL LIGHT BRACKETS	REMARKS	REPLACES F451415	SH
X451415-0703	✓	5	4" PIPE	N451415-0701	2		X451415-0203	02
X451415-0704	✓	5	4" PIPE	N451415-0702	4		X451415-0204	02
X451415-0705	✓	6	5" PIPE	N451415-0701	2		X451415-0205	02
X451415-0706	✓	6	5" PIPE	N451415-0702	4		X451415-0206	02
X451415-0707	PER VIEW "X"	7	10" TO 11" O.D.	N451415-0701	2		X451415-0207	02
X451415-0708	PER VIEW "X"	8	10" TO 11" O.D.	N451415-0702	4		X451415-0402	04
X451415-0710	PER VIEW "Y"	9	5" PIPE	N451415-0701	2		X451415-0605	06
X451415-0711	PER VIEW "Y"	10	5" PIPE	N451415-0702	4			
X451415-0712	PER VIEW "W"	11	10" TO 11" O.D.	N451415-0701	2	FOR CANADIAN PACIFIC		
X451415-0713	PER VIEW "W"	12	10" TO 11" O.D.	N451415-0702	4	FOR CANADIAN PACIFIC		
X451415-0714	PER VIEW "Y"	13	5" PIPE	N451415-0702	4	FOR 39 FT / 44 FT WOOD ARMS (1)	X451415-0601	06
X451415-0715	PER VIEW "Y"	14	4" PIPE	N451415-0702	4			
X451415-0716	PER VIEW "Y"	15	5" PIPE	N451415-0702	4			

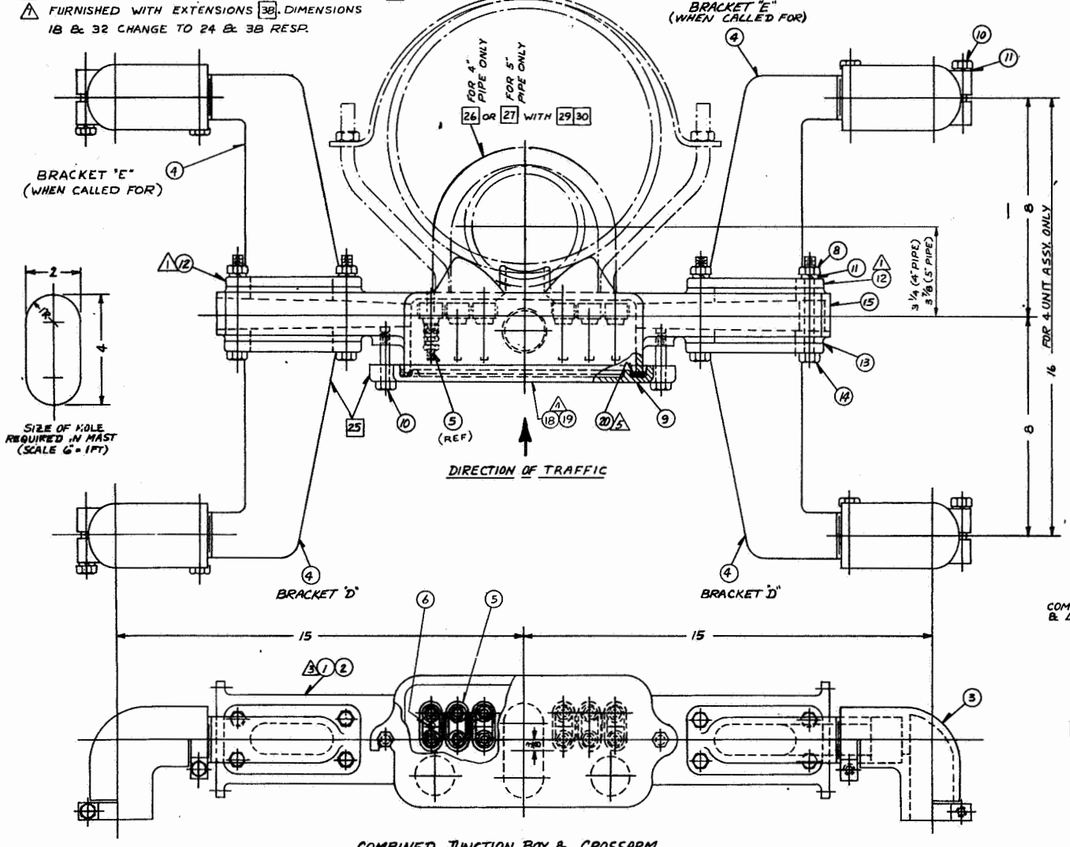

COMBINED JUNCTION BOX & CROSSARM
FOR TWO OR FOUR LIGHT UNITS (FOR APPLICATION TO 4" & 5" PIPE OR 10" O.D. AL. MAST)

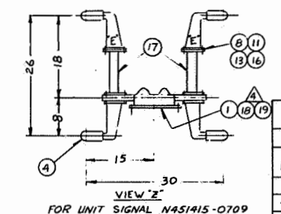

VIEW "Z"
FOR UNIT SIGNAL N451415-0709 (FOR OTHER INFORMATION SEE MAIN VIEW

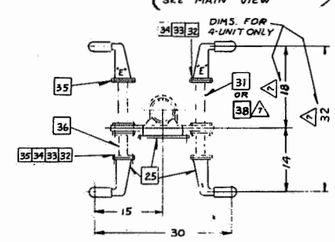

VIEW "Y"
2-UNIT & 4-UNIT JCT BOX/CROSSARM FOR 4" & 5" MAST (4 UNIT AS SHOWN, 2 UNIT WITHOUT BRACKETS "E" & [31].)

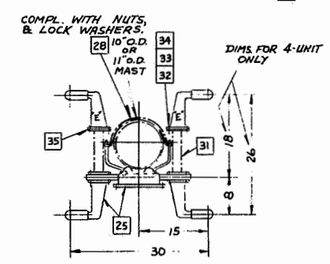

VIEW "X"
2-UNIT & 4-UNIT JCT BOX/CROSSARM FOR 10"-11" MAST (4 UNIT AS SHOWN, 2 UNIT WITHOUT BRACKETS "E" & [31].)

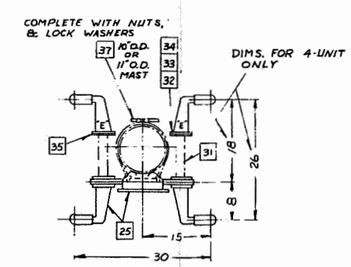

VIEW "W"
2-UNIT & 4-UNIT JCT BOX/CROSSARM FOR 10"-11" MAST WITH SPECIAL BRACKET (4 UNIT AS SHOWN)

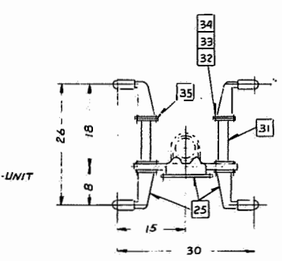

VIEW "V"
4-UNIT JCT BOX/CROSSARM FOR 4" & 5" MAST

JCT. BOX & CROSSARM (ITEMS SHOWN ◯)

GROUPS 3	2	1	ITEM NUMBER	PART IDENTIFICATION T	NUMBER	SUFFIX	DESCRIPTION	F451416 T	DRAWING NUMBER	SHEET
										07
1	1	1	1	J	026110		BOX, JCT. & CROSS ARM	F	451416	03
	—	—	2				SEE LINE 9000 ON COMPUTER B.M.			
4	4	2	3	J	026105	2101	ELBOW, ADJUSTING	V	026105	21
4	4	2	4	J	026105	2001	BRACKET, SIGNAL LIGHT	V	026105	20
2	2	2	5	N	194765		BLOCK, 3-WAY TERM.		9968	1137
4	4	4	6	J	525282	0110	SCR, #10-32×3/8 FIL. GALV.	V	525282	01
			7							
16	8	8	8	J	480210	0103	NUT, 3/8 HEX. STL. GALV.	V	480210	01
1	1	1	9	J	026094		COVER	D	66217	01
10	10	6	10	J	500099	0132	SCR, 3/8-16×2 HEX. S. GALV.	V	500099	01
24	16	12	11	J	475138	0113	WASHER, 3/8 LK. STL. GALV.	V	475138	01
—	—	2	12	M	451416	0201	PLATE, COVER	B	451416	02
6	4	4	13	J	047313		GASKET		8078	1590
8	8	8	14	J	500099	0156	SCR, 3/8-16×3 1/2 HEX. S. GALV.	V	500099	01
2	2	2	15	J	026105	2301	PLATE, END COVER	V	026105	23
8	—	—	16	J	500099	0124	SCR, 3/8-16×1 1/2 CAP	V	500099	01
2	—	—	17	R	451416	0412	ARM, EXTENSION 10" LG.	D	451416	04
1	1	1	18	N	438079		BAG OF TAGS 1 THRU 12	B	35001	10
1	1	1	19		—	—	PRINT, INSTRUCTION SH.	C	451523	0101
22 FT.	22 FT.	22 FT.	20	A	750043		GASKET, 1/8×1/2×26 RUBBER			
			21							
			22							
			23							
			24							

SBM JCT. BOX & CROSSARM COMPL. (ITEMS SHOWN □)

GROUPS 15	14	13	12	11	10	9	8	7	6	5	ITEM NUMBER	X451415 T	PART IDENTIFICATION NUMBER	SUFFIX	DESCRIPTION	F451416 T	DRAWING NUMBER	SHEET
																		07
1	1	1	1	1	1	1	1	1	1	1	25		SEE TAB		JCT. BOX & CROSS ARM		SEE TAB	
—	1	—	—	—	—	—	—	—	—	1	26	M	392791		BOLT, 3/8 "U" (4" PIPE)	B	35152	23
1	—	1	—	—	1	1	—	—	1	—	27	M	397808		BOLT, 3/8 "U" (5" PIPE)	B	35152	23
—	—	—	—	—	—	—	1	1	—	—	28	X	451498	2603	KIT, CLAMP ASSY 10"	D	451498	26
2	2	2	—	—	2	2	—	—	2	2	29	J	480210	0156	NUT, 3/8-11 HEX. GALV.	V	480210	01
2	2	2	—	—	2	2	—	—	2	2	30	J	475132	0118	WASHER, 3/8 PL. GALV.	V	475132	01
2	2	—	2	—	2	—	2	—	—	—	31	R	451416	0412	ARM, EXTENSION (10" LG)	D	451416	04
8	8	16	8	—	16	8	8	—	—	—	32	J	500099	0124	SCR, 3/8-16×1 1/2 HEX. S. GALV.	V	500099	01
8	8	16	8	—	16	8	8	—	—	—	33	J	475138	0113	WASHER, 3/8 STL. LK. GALV.	V	475138	01
8	8	16	8	—	16	8	8	—	—	—	34	J	480210	0103	NUT, 3/8 HEX. STL. GALV.	V	480210	01
2	2	4	2	—	4	2	2	—	—	—	35	J	047313		GASKET, CORK		8078	1590
—	—	2	—	—	2	2	—	—	—	—	36	R	451416	0404	ARM, EXTENSION (6" LG)	D	451416	04
—	—	—	1	1	—	—	—	—	—	—	37	J	033183		KIT, CLAMP ASSY (10")			
—	—	2	—	—	—	—	—	—	—	—	38	R	451416	0410	ARM EXTENSION (16" LG)	D	451416	04

SEE OTHER TABS. FOR COMPLETE PART NO'S

PART NUMBER	DESCRIPTION	MATERIAL/SPECIFICATION
X451415-XXXX	BOX, JCT. & CROSSARM COMPL.	
N451415-XXXX	BOX, JCT. & CROSSARM	

SIMILAR TO F451415-SH.02

F451415 sh. 7, Rev. 2

SERVICE MANUAL 6076

Alignment and Maintenance

SIGNAL UNITS
HC-100

(For Installation, Refer to Service Manual 6048)

April, 1982
D-10/86-50-2133-3

PRINTED IN USA

UNION SWITCH & SIGNAL DIVISION
AMERICAN STANDARD INC / PITTSBURGH, PA 15237

SERVICE MANUAL 6076

Alignment and Maintenance

SIGNAL UNITS
HC-100

(For Installation, Refer to Service Manual 6048)

April, 1982
D-10/86-50-2133-3

PRINTED IN USA

UNION SWITCH & SIGNAL DIVISION
AMERICAN STANDARD INC / PITTSBURGH, PA 15237

TABLE OF CONTENTS

Section		Page
I	GENERAL	2
II	DESCRIPTION	2
	2.1 GENERAL	2
III	HC-100 SIGNAL UNIT INSTALLATION AND ALIGNMENT	2
	3.1 INSTALLATION (Refer to SM-6048)	2
	3.2 ALIGNMENT (REVISED SIGNAL MANUAL PART 268)	3
IV	MAINTENANCE	5
	4.1 GENERAL	5
	4.2 LAMPS	5
	4.3 CLEANING ROUNDEL & REFLECTOR	6
	4.4 DAMAGED SIGNAL UNITS	6
	4.4.1 Damaged Roundels	6
	4.4.2 Damaged Lamp Receptacles	7
	4.4.3 Cracked or Broken Reflectors	7
	4.4.4 Damaged Case or Door	7
	4.5 SHOP REPAIR & ADJUSTMENT FOR THE HC-100 SIGNAL UNIT	7
	4.5.1 Test Equipment	7
	4.5.2 Adjustment of Lamp Socket	8
VI	PARTS LIST	11

SECTION I

GENERAL

This service manual describes the assemblies for the HC-100 Signal Units (manufactured subsequent to March 1, 1977) and provides information for light unit alignment and maintenance. Complete parts list for the signal units are shown in Figure 5-1.

The HC-100 signal unit fits all suppliers' crossarms with standard 1-1/4" straight male pipe thread section connections.

SECTION II

DESCRIPTION

2.1 GENERAL

The HC-100 Signal Unit crossarm assemblies offer various arrangements:

a) 2-Light Units on One Crossarm.
b) 4-Light Units (back to back) on One Crossarm.
c) Cantilever mast, where ladder is located on road side.
d) Application to standard 4" or 5" mast with a wooden gatearm or application to a Cantilever 10" mast where ladder is located on field side of mast light. (See application drawings Figure 5-2 through 5-5 enclosed herein and Figure 2-1 enclosed with XA-120 crossarms service manual 6048).

Light units are designed with a built-in means for alignment with the use of a sighter tube. Alignment procedures are outlined under "HC-100 Signal Unit Alignment" and "Maintenance".

SECTION III

HC-100 SIGNAL UNIT INSTALLATION AND ALIGNMENT

3.1 INSTALLATION

When installing HC-100 Signal Units to a XA-120 Crossarm, refer to Service Manual 6048 for appropriate procedure.

The subject of this service manual is HC-100 signal units manufactured subsequent to March 1, 1977. These signal units are intended for installation to a XA-120 crossarm. However, the signal units are shipped with a 1-1/4" NPT connector and consequently the unit may be installed on any crossarm which accepts this standard type connector. Moreover, by retaining the originally supplied ball-socket member, these signal units may also be installed on earlier WABCO type combined junction box crossarms to replace damaged HC-100 signal units which were manufactured prior to March 1, 1977. In this latter instance, the following procedures are to be followed, otherwise installation and alignment of the new signal unit is the same as that stipulated for the earlier version signal unit:

a) Discard the 1-1/4" NPT connector which is supplied with the new signal unit.

b) Remove the existing wiring between crossarm junction box and crossarm elbow in favor of pig tail leads supplied with new signal unit.

c) Fit new signal unit to the existing ball-socket member.

3.2 ALIGNMENT

Vertical adjustment should be made first with the horizontal adjustment tightly clamped so that unit wiggling does not cause a bad vertical adjustment. A sighting tube (N170622) can be used to aid in the initial adjustment. The final adjustment should be checked by an observer on the road, safely. (See Figure 1).

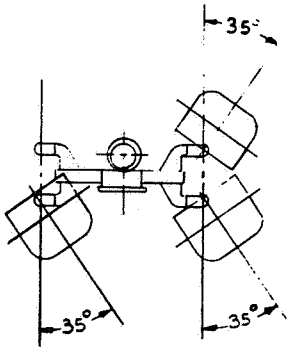

VIEW SHOWING MAX. HOR. ADJUSTMENT
FOR 8-3/8" LIGHT UNIT (HC-100)

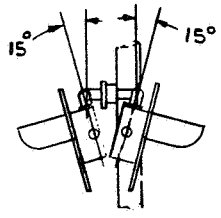

VIEW SHOWING MAX. VERT. ADJUSTMENT
FOR 8-3/8" LIGHT UNIT (HC-100)

Figure 1. Maximum Adjustment Facility for HC-100 Light Units

AAR Signal Manual Part 268, 1972 Revision is repeated herein as a Guide to Signal Unit Alignment. Some sentences of manual part 228 are omitted for simplicity sake.

ALIGNING HIGHWAY CROSSING SIGNAL REFLECTOR TYPE LIGHT UNITS
(REVISED SIGNAL MANUAL PART 268)

These instructions apply to the aligning of highway crossing signal electric light units which have sealed lamp receptacles and are in accordance with Manual Part 166. They set forth general requirements representing recommended practice.

(1) The aligning of electric light units in accordance with these instructions must not be started until proper protection has been afforded for highway and pedestrian traffic. When aligning, care must be exercised that no unsafe conditions are set up.

(a) The lamp receptacles are positioned and sealed by the manufacturer, using 1/64 inch precision based lamps. To obtain the range and efficiency intended, signal precision lamps must always be used in the light units.

(b) When aligning of light units has been completed, tests must be made immediately to determine that the equipment functions as intended.

(2) Procedure is as follows:

(a) Front light units

(1) Continuously light one lamp.
(2) Open door wide so clear beam is displayed.
(3) Adjust light unit vertically to align axis of beam five feet six inches above pavement at selected alignment distance. Both lamps should be aligned to same point.
(4) Adjust light unit horizontally to align axis of beam to center of approach lane in approach to signal at selected alignment distance, maintaining vertical alignment.
(5) Tighten clamps and close door.
(6) Repeat Instructions 2-a-1 to 2-a-5, inclusive, on other front light units.

(b) Back light units where used

(1) Continuously light one lamp.
(2) Open door wide so clear beam is displayed.
(3) Adjust light unit vertically to align axis of beam five feet six inches above pavement at a point 50 ft. in approach to the signal on opposite side of track.

(4) Adjust light unit horizontally to align axis of beam to a point 50 feet with symmetric patterned roundels, 150 feet with non-symmetrical roundels in approach to the signal on opposite side of track and in center of approach lane, maintaining vertical alignment as in Instruction 2-b-3.
(5) Tighten clamps and close door.
(6) Repeat Instructions 2-b-1 and 2-b-5, inclusive on other back light units.

(c) After units have been aligned, clamps tightened and doors closed, they must be checked with lights flashing and lamps burning at recommended voltage to make certain a flashing light aspect is visible within a range of 1,000 feet.

SECTION IV

MAINTENANCE

4.1 GENERAL

Maintenance of HC-100 Signal Units generally consists of cleaning the lamps, the roundel, and the reflector surfaces and replacement of the lamp.

4.2 LAMPS

Lamps should be replaced before the end of their rated life. It is recommended that the actual "burning" time in service for lamps should not exceed 50% of their calculated "average life" for the particular voltage applied to them as read on the "Voltage vs Life Curve", Figure 1, of Instruction Pamphlet U-5037 entitled "Life, Installation and Replacement of Railway Signal Lamps".

6-volt lamps		8-volt lamps		10-volt lamps	
Applied Voltage	Hours	Applied Voltage	Hours	Applied Voltage	Hours
4.8	7700	6.4	7700	8.0	7700
4.9	5915	6.5	6400	8.1	6650
5.0	4230	6.6	5570	8.2	5600
5.1	2890	6.7	3800	8.3	4550
5.2	2080	6.8	2890	8.4	3500
5.3	1560	6.9	2180	8.5	2890
5.4	1310	7.0	1780	8.6	2390
5.5	1040	7.1	1470	8.7	1950
5.6	820	7.2	1310	8.8	1620
5.7	650	7.3	1100	8.9	1430
5.8	510	7.4	920	9.0	1310
5.9	420	7.5	770	9.1	1140
6.0	350	7.6	650	9.2	970
6.1	295	7.7	530	9.3	870
6.2	240	7.8	465	9.4	740
6.3	200	7.9	400	9.5	650
		8.0	350	9.6	550
		8.1	315	9.7	490
		8.2	275	9.8	440
		8.3	230	9.9	390
		8.4	200	10.0	350
				10.1	320
				10.2	290
				10.3	250
				10.4	220
				10.5	200

(Based on average laboratory life of 1000 hours at rated voltage)

Table 1. Life Hours For Lamps

Replacement at 30% to 40% of the calculated average life is optional; as 5% of the lamps will fail at, or before 35% of rated average life. If failure of 5% of the lamps is considered the maximum permissible during the period between renewals, it is apparent that it is necessary to replace all lamps at 35% of rated life. For further information, refer to Instruction Pamphlet U-5037.

Removal of old lamps and installation of new ones in the HC-100 signal is the same as for earlier type signals. As the lamps are precision type, no change in adjustments will be necessary unless the signal has been damaged.

4.3 CLEANING ROUNDEL AND REFLECTOR

Crossing signals are currently equipped with glass or plastic roundels and glass reflectors. Usually the glass surfaces can be cleaned with a moist cloth to remove the accumulation of dust, etc. and the surfaces wiped dry with a clean dry cloth.

Plastic roundels require a different type of cleaning procedure. Use the method outlined in the following:

1. Flush the roundel surfaces with clean water, using a chamois or soft cloth.

2. To remove oil or grease, use one of the current household detergents with water and a clean chamois, soft cloth or sponge free of dirt, grit, etc. DO NOT USE ANY SOLVENT such as alcohol, gasoline, kerosene, carbon tetrachloride or kitchen scouring compound at any time.

3. Rinse thoroughly with clean water.

4. Dry the cleaned surface with a clean cloth that is devoid of grit or dirt.

4.4 DAMAGED SIGNAL UNITS

Damaged signal units fall into one of four classifications:

1. Broken roundel.

2. Broken roundel and damaged lamp receptacle.

3. Broken roundel, damaged lamp receptacle, and cracked or broken reflectors.

4. Broken case, door and other parts.

4.4.1 Damaged Roundel

A damaged roundel can be replaced and the signal restored to service after an inspection shows the lamp receptacle adjustment has not been disturbed. First, replace the damaged roundel. If the gasket has not been damaged, it may be reused. It is advisable, however, when replacing a roundel that

has been in service for several years to check the old gasket carefully and replace any obviously aged or questionable gaskets to avoid possible leakage troubles in the future.

When the new roundel has been installed, insert the sighting tube into the sighter socket in the case and check the signal unit for proper beam alignment on the highway approach. After the signal beam has been checked to agree with the sighter, observe the indication from the roundel. Signal units that do not produce a satisfactory alignment should be re-aligned as outlined in this manual.

4.4.2 Damaged Lamp Receptacles

Damaged lamp receptacles may not be visually evident. Changing or adjusting the lamp receptacle in the field is not recommended. The unit should be shopped to bring alignment of sighter and light beam into agreement, otherwise the misalignment of the light beam will provide alignment difficulties in the future.

4.4.3 Cracked or Broken Reflectors

Cracked or broken reflectors can be replaced in the field. Instead, however it is recommended that the unit be replaced and returned to the repair shop for replacement of reflector and readjustment of the lamp receptacle to assure most efficient output and proper alignment.

4.4.4 Damaged Case or Door

A damaged case, door, or other parts generally result in broken reflector, misplacement of lamp receptacle with attendant misalignment or the indication, reduction in efficiency or all of these troubles, and therefore shop repairs are required.

4.5 SHOP REPAIR AND ADJUSTMENT FOR THE HC-100 SIGNAL UNIT

The signal unit should be returned to the repair shop for replacement of damaged or broken parts and then socket re-adjustment and beam alignment, with the sighter, should be made in a suitable dark room.

4.5.1 Test Equipment

Test Equipment required for adjusting crossing signal units is as follows: (See Figure 4-1).

a) A suitable adjustable test stand for supporting the signal unit firmly in position. This should be a fixture which terminates in such a way as to accept the standard mounting elbow and allow for horizontal and vertical adjustment.

b. The test stand should be located 50 feet from a vertical flat white screen.

c. On the flat white screen, locate a beam target at the same height as the signal axis as shown in Figure 4-1).

d. Place a small filament lamp at the location of the sighter target illustrated in Figure 4-2. This lamp may be in front of the screen or located behind a 1/2" dia. hole through the screen.

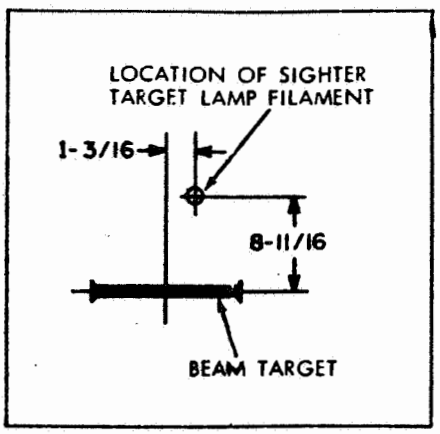

Figure 4-1 Location of Screen Targets

e. Use a standard Precision base test lamp for setting the lamp receptacle.

CAUTION

As a precaution, remove the test lamp from the signal before soldering to prevent damage to the lamp.

Check the test lamp periodically to assure of its accuracy and suitability as a test lamp. This can be accomplished by inserting the lamp in a unit which has been selected for use as a "standard" and is set aside and kept for the specific purpose of checking the test lamps and sighter alignment.

f. Sighting tube accuracy can be checked readily by the following method: Mount a sighter socket (tapered) in a fixed position so that the sighter is aligned on a prominent object approximately 1/2 mile away. Rotate the sighter 180° in the socket and check the new sighting point of the cross hairs. If the new sighting position coincides with the original sighting on the distant object, the sighter is satisfactory. If it is not satisfactory, replace the sighter with one which is accurate and have the defective sighter corrected before it is used again to adjust or to align signals. (The long sighter N187827 must be used for adjusting signal units in the dark room.

4.5.2 Adjustment of Lamp Socket

Mount the signal unit in the test stand located 50 feet from the flat white screen. Open the signal unit door for access to the lamp receptacle and its mounting.

Insert the sighter in the sighter socket which is inside the signal case near the bottom and place the handle of the sighter in the vertical position. Then adjust the signal case on the crossarm (or suitable test stand) until the cross hairs of the sighter have the lighted target lamp filament divided into four parts. Clamp the signal unit in this position.

After the signal unit is clamped in position, proceed to the alignment procedure which applies to the particular type of lamp receptacle bracket used in the unit.

Before any adjustments are made, ensure that the insulated supports are tight to prevent lamp receptacle support from shifting.

Place a standard lamp in the socket, loosen screw "A" (and lock nut) as shown in Figure 4-2. Move the bracket in or out until maximum concentration of light beam is obtained; i.e., until the minimum size of image is obtained on the screen. This minimum image should be less than 30" in diameter at 50 feet and have a well defined outer edge. Also adjust the socket up and down for vertical beam alignment on the target. Temproarily tighten screw "A". Loosen screw "B" (and lock nut), adjust socket horizontally to center beam on target. Each adjustment effects the other, thus it may be necessary to repeat the adjustments several times before proper alignment is obtained.

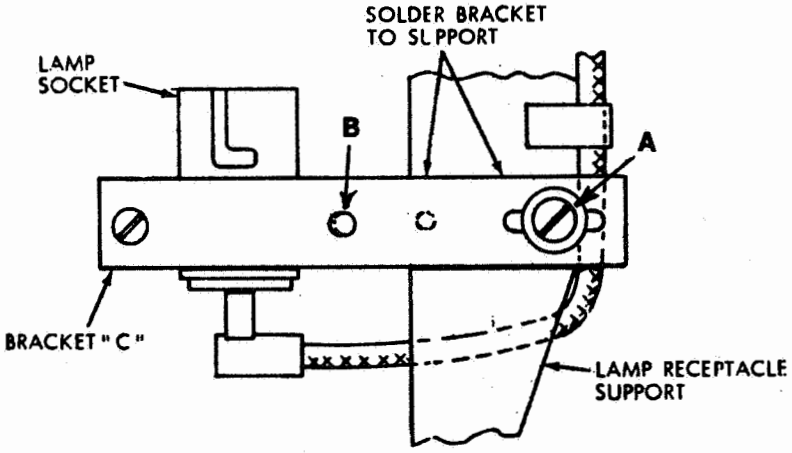

Figure 4-2. Alignment and Soldering of Lamp Receptacle Bracket

After satisfactory adjustment has been obtained, close the signal unit door and check the appearance of the indication on the red roundel to provide a completely illuminated or well filled roundel with no dark spots. If the indication is satisfactory, open the door and rotate the signal unit so the lamp receptacle support is in the horizontal position as shown in Figure 4-3A. Solder bracket "C" securely to the lamp receptacle support as shown in Figure 4-3B.

After the socket has been soldered, check the light beam again with the sighter tube to ensure that the adjustment has not been altered during the soldering operation. If the alignment has changed, unsolder the bracket and realign the light beam to agree with the sighter. Resolder the bracket and then check the alignment again.

SECTION V

PARTS LIST

X436678 SBM UNIT COMPL., USING HC-100 SIGNAL N436679, WITH HOOD 101, BACKGROUND 100 & LAMP 102

X390731-001 SBM UNIT COMPL., USING HC-100 SIGNAL N394817, WITH HOOD 101 & BACKGROUND 100

PC. NO. HC-100 UNIT COMPL. △1	CASE (1)		COVER (2)		SUPPORT, LAMP UNIT (42)		(REF.) FINISH OF ITEMS 1, 2 & 42	ROUNDEL (38)						TAG (40)		REMARKS
								PC. NO.					(REF.) MATERIAL			
	F80171	SH.	F80171	SH.	D451416	SH.		C50028	SH.	COLOR	HORIZONTAL	DEFLECTION		10939	SH	
N436679	M438144-001	01	M390663-001	02	M451416-0105	01	BLACK	J532135	—	RED	20° SPREADLITE 2" HOT SPOT	10° DOWNWARD	LEXAN	——	—	
N390730	M438144	01	M390663	02	M451416-0104	01	ALUM.	J532119	10	RED	20° SPREADLITE LONG RANGE	32° DOWNWARD	LEXAN	M438747	711	
N394817	M438144	01	M390663	02	M451416-0104	01	ALUM.	J530119	8	RED	30° SPREADLITE LONG RANGE	15° DOWNWARD	LEXAN	——	—	
N437283	M438144	01	M390663	02	M451416-0104	01	ALUM.	J532135	—	RED	20° SPREADLITE 2" HOT SPOT	10° DOWNWARD	LEXAN	——	—	
N390729	M438144	01	M390663	02	M451416-0104	01	ALUM.	J530117	6	RED	30° SPREADLITE LONG RANGE	NONE	LEXAN	——	—	
N394830	M438144	01	M390663	02	M451416-0104	01	ALUM.	J530120	7	YELLOW	30° SPREADLITE LONG RANGE	15° DOWNWARD	LEXAN	——	—	

ITEM NO.	REQD.	PC. NO.	DWG.	SH.	DESCRIPTION
28	1	N295216	B17652	15	REFLECTOR
29	5	M394684	B35046	2	CLIP
30	5	J522156			SC. 8-32X3/16 FIL.-H.-SST
31	2	J475161			GROMMET, NYLON
32	2	M390679	8163	308	WINDOW, TRANSPARENT
33	2	M390675	B35051	43	GASKET
34	2	M390680	B35055	43	SPRING
35	3	J525262			SC. 10-32X1/2 R.HD.-SST
36	3	J475121-0109	Y435121	01	WASH., .10 (NO) LOCK SST
37	1	J047644	8078	1860	GASKET, RUBBER
38	1	(SEE MINUTHB.)			ROUNDEL
39					
40	1	(SEE MINUTHB.)	10939		TAG
41	2	J525311			SC. 1/4-20X3/8 HOLHD.BIND
42	1	(SEE MINUTHB.)	D451416	01	SUPPORT, LAMP UNIT
43	1/8 IN.	M041652			COMPOUND-SILICONE RUBBER
44	1/2 SQ.	J047081	8078	1933	GASKET, RUBBER
△5 45	1	5000831	10939	MET	TAG, FORM 831
46					
47					
48					
49					
50					
51					
52	1	N451498-1301	D451498	13	HOLDER, RECEPTACLE
53					
54					

ITEM NO.	REQD.	PC. NO.	DWG.	SH.	DESCRIPTION
1	1	SEE NOTE	F80171	01	CASE
2	1	TAB.	F80171	02	COVER
3	1	M436367	D062217	11	POST, HINGE
4	3/4	A350057			GASKET
5	1	M390685	7318	80	SCREEN, VENT
6	1	M436362	B35089	21	SCREW
7	1	J048687			PIN, 3/32X5/8 COTTER SST
8	1	M391734	B35051	51	GASKET
9	2	J500083-0116	Y500083	01	SC. 1/4-13X1 HEX CAP SST
10	2	J475121-0115	Y435121	01	WASH. 1/4 (NO) LOCK SST
11					
12					
13	1	J078399			BAND, 3/4X1/16
14	2	J048688			PIN, 1/8X3/4 COTTER SST
15	3	J525261			SC 8-32X3/8 R.HD. SST
16	3	J048249			NUT, 8-32 SQ STL. CD.PL
17	3	J475104			WASH., LOCK
18	1	UD451523-0104	C451523	0104	INSTRUCTION SHEET
19					
20					
21					
22					
23					
24					
25					
26					
27					

THE FOLLOWING ITEMS ARE "FOR REF. ONLY"

100	M390713	D062217	6	BACKGROUND
101	M390714	D062217	7	HOOD
102	J714463			LAMP, 10V, 18W
103	J715742			LAMP, 10V, 25W
104	J714054			LAMP, 110V, 25W
105				

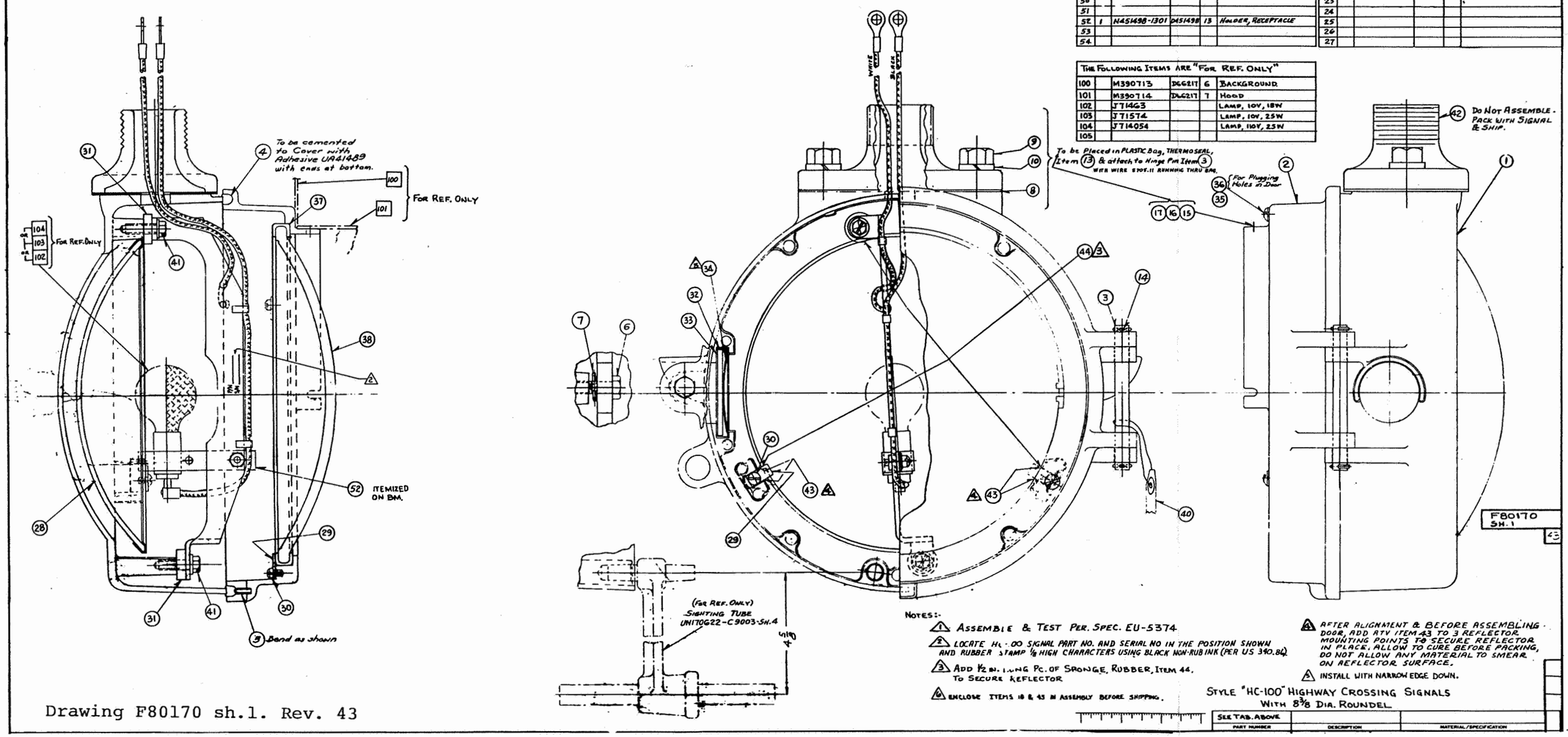

Drawing F80170 sh.1. Rev. 43

Figure 5-1. HC-100 Signal Unit Parts Location Diagram

Drawing F451506 sh. 1, Rev. 8

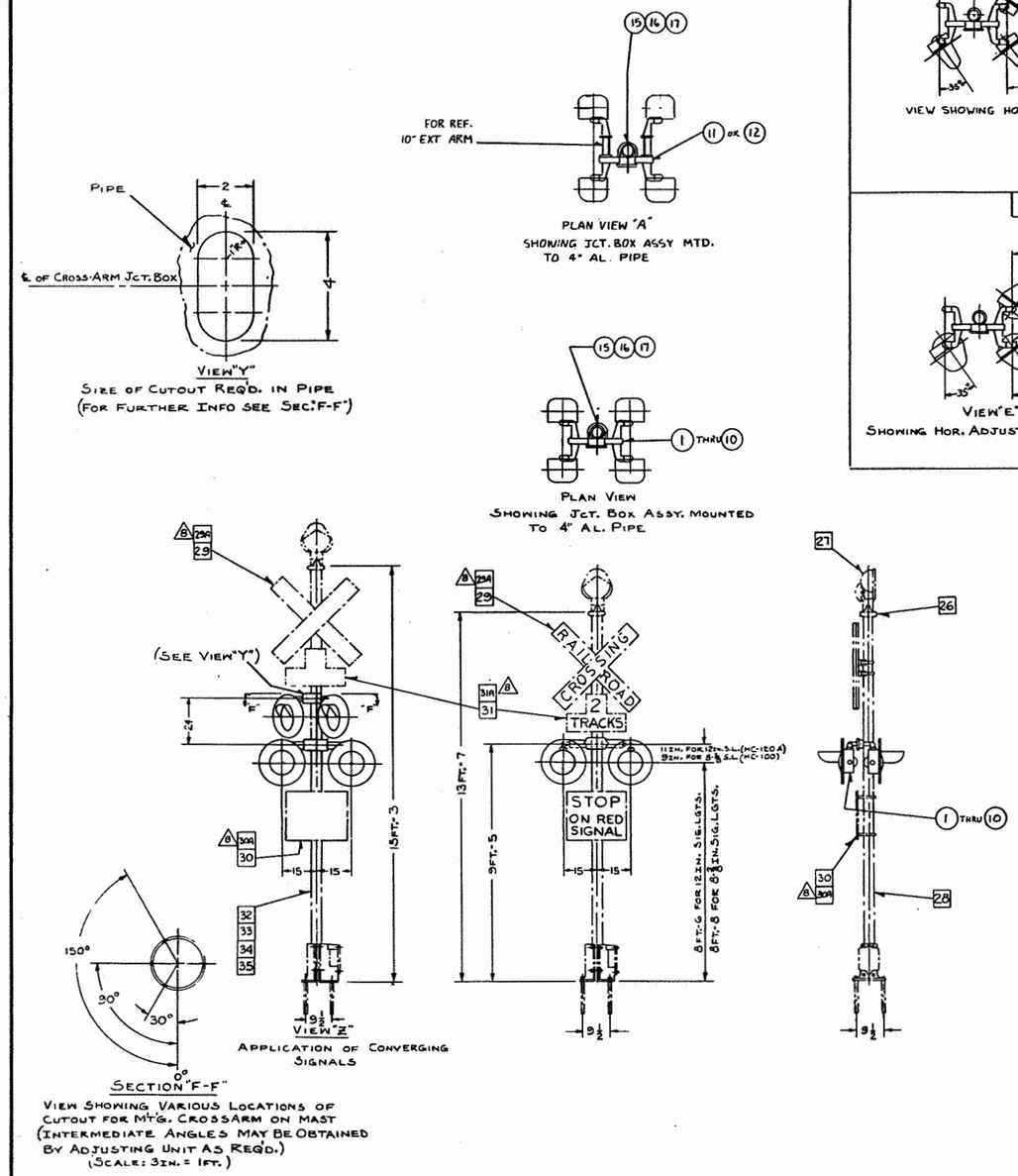

VERTICAL & HORIZONTAL ADJUSTMENTS

HC-100

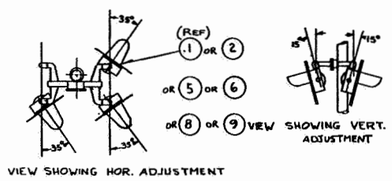

HC-120A

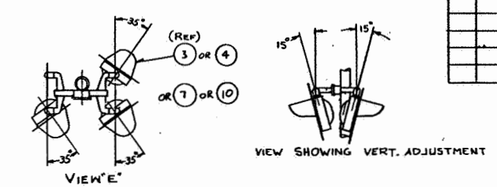

GROUP NUMBER .2112	.2111	.2110	.2109	.2108	.2107	.2106	.2105	.2104	.2103	.2102	.2101	ITEM No.	X	451506 PART IDENTIFICATION NUMBER	SUFFIX	SIGNALS. DESCRIPTION	F	451506 DRAWING NUMBER	'01 SHEET	SUB	APPLICATION SHEET	VIEW
—	—	—	—	—	—	—	—	—	—	—	1	1	N	451506	1101	JCT. B & 2 HC-100 ASSY	F	451506	11			
—	—	—	—	—	—	—	—	—	—	1	—	2	N	451506	1103	JCT. B. & 4 HC-100 ASSY	F	451506	11			
—	—	—	—	—	—	—	—	—	1	—	—	3	N	451506	1001	JCT. B. & 2 HC-120A ASSY	F	451506	10			
—	—	—	—	—	—	—	—	1	—	—	—	4	N	451506	1003	JCT. B. & 4 HC-120A ASSY	F	451506	10			
—	—	—	—	—	—	—	1	—	—	—	—	5	N	451506	1107	JCT. B. & 2 HC-100 ASSY	F	451506	11			
—	—	—	—	—	—	1	—	—	—	—	—	6	N	451506	1108	JCT. B. & 2 HC-100 ASSY	F	451506	11			
—	—	—	—	—	1	—	—	—	—	—	—	7	N	451506	1007	JCT. B. & 2 HC-120A ASSY	F	451506	10			
—	—	—	—	1	—	—	—	—	—	—	—	8	N	451506	1109	JCT. B. & 4 HC-100 ASSY	F	451506	11			
—	—	—	1	—	—	—	—	—	—	—	—	9	N	451506	1110	JCT. B. & 4 HC-100 ASSY	F	451506	11			
—	—	1	—	—	—	—	—	—	—	—	—	10	N	451506	1010	JCT. B. & 4 HC-120 ASSY	F	451506	10			
—	1	—	—	—	—	—	—	—	—	—	—	11	N	451506	1005	JCT. B & 4 HC 120A ASSY	F	451506	10			
1	—	—	—	—	—	—	—	—	—	—	—	12	N	451506	1105	JCT. B. & 4 HC-100 ASSY	F	451506	11			
												13										
1	1	1	1	1	1	1	1	1	1	1	1	14	—	—	—	PRINT	F	451506	01			
1	1	1	1	1	1	1	1	1	1	1	1	15	M	392791		U-BOLT	D	39152	23			
2	2	2	2	2	2	2	2	2	2	2	2	16	J	480210	0156	NUT, 5/8-11 HEX. JAM	V	480210	01			
2	2	2	2	2	2	2	2	2	2	2	2	17	J	475132	0118	WSHR., 5/8 STL. PL.	V	475132	01			

8	THE FOLLOWING PARTS ARE OPTIONAL WHEN REQ'D. ORDER SEPARATELY								
29A	X	392931	007	SIGN, CROSSING	D	66217	14		
30A	X	392930	005	SIGN, (STOP ON RED)	D	66217	13		
31A	X	392929	005	SIGN, (NO. OF TRACKS)	D	66217	12		

	THE FOLLOWING PARTS ARE OPTIONAL. WHEN REQ'D. ORDER SEPARATELY								
26	J	026104	—	CAP, PIPE	D	66217	1		
27	X	451542	0102	BELL, MOD. BA/10 (4 IN)	F	451542	01		
28	N	434390	—	MAST, SIGNAL	C	50037	56		13FT.-7
29	X	392931	001	SIGN, CROSSING	D	66217	14		
30	X	392930	001	SIGN (STOP ON RED)	D	66217	13		
31	X	392929	001	SIGN (NO. OF TRACKS)	D	66217	12		
32	N	434391	—	MAST, SIG. (1) HOLE	C	50037	47		15FT.-3
33	N	434857	—	MAST, SIG. (2) HOLES	C	50037	47		30K-SIG.FOR 15FT.-3
34	N	432071	—	MAST, SIG. (2) HOLES	C	50037	47		30K-SIG.FOR 15FT.-3
35	N	438088	—	MAST, SIG. (2) HOLES	C	50037	47		150K-SIG.FOR 15FT.-3

4

ITEMS 29A, 30A & 31A ARE MADE WITH HI-INTENSITY "SCOTCHLITE" TAPE AND SHOULD BE ORDERED WHEN REQ'D.

9 FOR REF. ONLY
LAMP, 10V-18W (UJ 71463)
LAMP, 10V-25W (UJ 71574)
LAMP, 110V-25W (UJ 714054)

APPLICATION OF MODEL XA-120 JUNCTION BOX & CROSS-ARM FOR HIGHWAY CROSSING SIGNALS WITH TWO OR FOUR WAY FLASHING UNITS (FOR 4" AL. PIPE) (WITHOUT FOUNDATION BOLTS)

NOTES:

2 FOR APPLICATION DWG. SHOWING HWY. CROSS. SIGNALS MOUNTED TO CANTILEVER SEE F451506-SH.07

3 FOR APPLICATION DWG. SHOWING HWY. CROSS. SIGNALS MOUNTED TO 5" PIPE SEE F451506-SH.03.

4 HOLES FOR CONVERGING SIGNALS PER VIEW "Z" & SECTION "F-F".

8 ALL COMPONENTS TO BE SHIPPED IN SAME CONTAINER.

5

PART NUMBER	DESCRIPTION	MATERIAL/SPECIFICATION
X451506-0112	SIGNALS, 4-UNIT CROSSING	USING HC-100 (30°-15° LENS) PER PLAN VIEW "Z"
X451506-0111	SIGNALS, 4-UNIT CROSSING	USING HC-120A (30°-15° LENS) PER PLAN VIEW "Z"
X451506-0110	SIGNALS, 4-UNIT CROSSING	USING HC-120A (20°-32° LENS)
X451506-0109	SIGNALS, 4-UNIT CROSSING	USING HC-100 20°-10° WITH 2 INCH HOT SPOT
X451506-0108	SIGNALS, 4-UNIT CROSSING	USING HC-100 (20°-32° LENS)
X451506-0107	SIGNALS, 2-UNIT CROSSING	USING HC-120A (20°-32° LENS)
X451506-0106	SIGNALS, 2-UNIT CROSSING	USING HC-100 20°-10° WITH 2 INCH HOT SPOT
X451506-0105	SIGNALS, 2-UNIT CROSSING	USING HC-100 (20°-32° LENS)
X451506-0104	SIGNALS, 4-UNIT CROSSING	USING HC-120A (30°-15° LENS)
X451506-0103	SIGNALS, 2-UNIT CROSSING	USING HC-120A (30°-15° LENS)
X451506-0102	SIGNALS, 4-UNIT CROSSING	USING HC-100 (30°-15° LENS)
X451506-0101	SIGNALS, 2-UNIT CROSSING	USING HC-100 (30°-15° LENS)

Figure 5-2. HC-100 Application Drawing

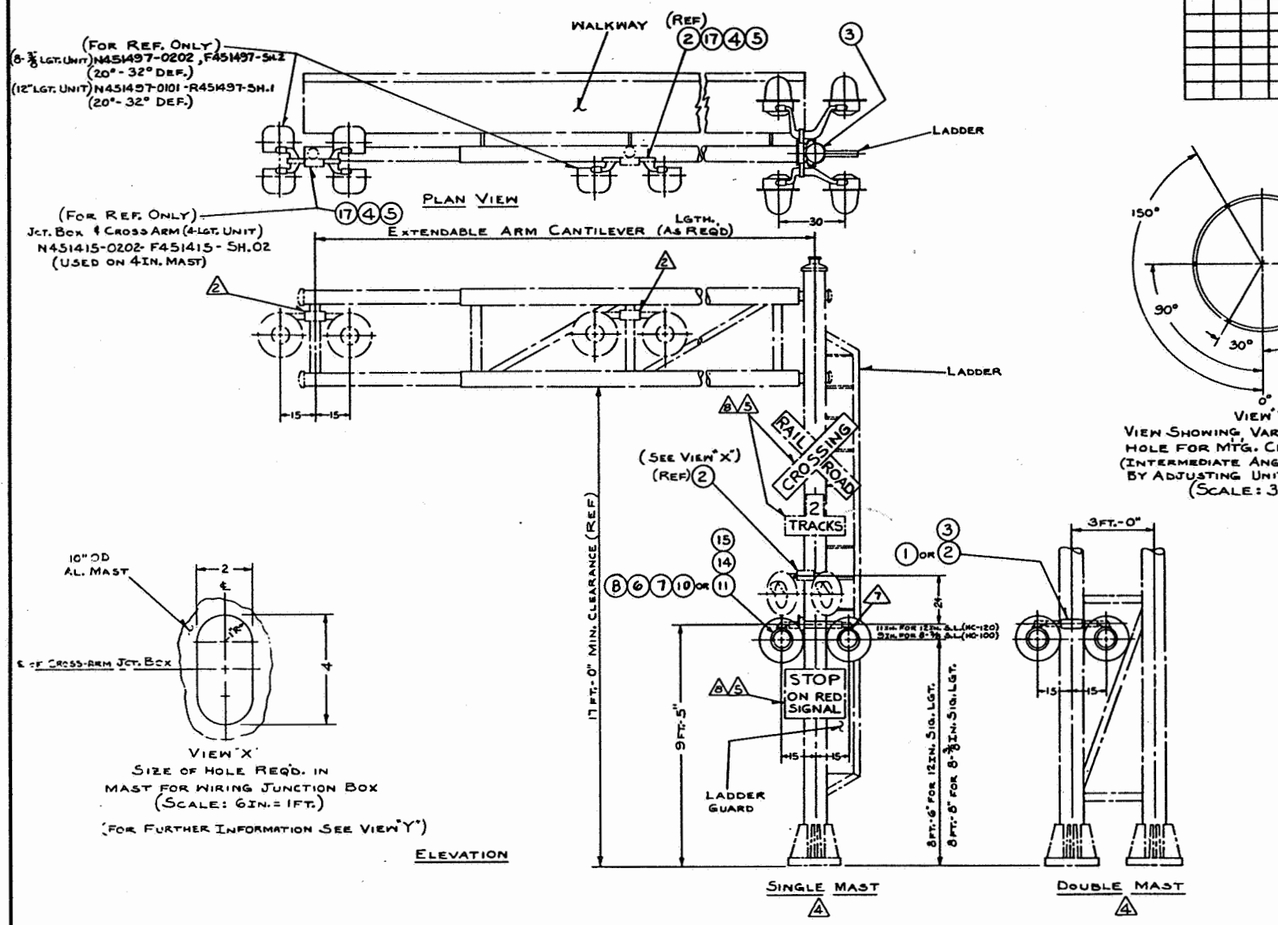

View "X"
Size of Hole Req'd. in Mast for Wiring Junction Box
(Scale: 6 In. = 1 Ft.)

(For Further Information See View "Y")

Elevation

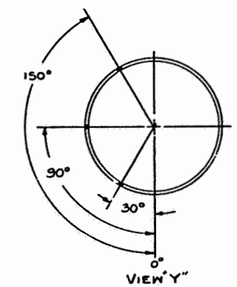

View "Y"
View Showing Various Locations of Hole for Mtg. Crossarm on Mast
(Intermediate Angles May Be Obtained By Adjusting Unit As Req'd.)
(Scale: 3 In. = 1 Ft.)

Application of Model XA-120 Junction Box & Cross-Arm for Grade Crossing Cantilever Type CASWT with 2 or 4-Unit Crossing Signals
(10" OD Al. Single or Double Mast)

(For Ref. Only)
Lamp, 10V-18W (UJ71463)
Lamp, 10V-25W (UJ71574)
Lamp, 110V-25W (UJ714054)

Notes:

1. Parts Shown in Dot & Dash — Order As Req'd.
2. For (2) or (4) Light Unit Jct. Box Assy. See F451415- Sh. 02.
3. For Application Dwg's. Showing Hwy. Crossing Signals Mounted to 4" & 5" Pipe See F451506-Sh.01 & 03.
4. For Concrete Foundations See Dwg. C-514895-Sh's. 1 & 2.
5. The Following Parts Ordered As Req'd.:
   (No. of Tracks) Sign X392929-004-D66217- Sh.12
   (Stop on Red Sig.) Sign X392930-004-D66217- Sh.13
   (Railroad Cross.) Sign X392931-003-D66217- Sh.14
6. HC-100 Hwy. Crossing Signals with 20° Spreadlite & 10° Vertical Deflection with 2 In. Hot Spot. (Wired)
7. Lamp Support Furnished With Items 8 & 10
8. The Following Parts Ordered As Req'd.
   (No. of Tracks) Sign, X392929-007-D66217- Sh.12
   (Stop on Red) Sign, X392930-007-D66217- Sh.13
   (Railroad Cross.) Sign, X392931-009-D66217- Sh.14
   Above Made With Hi-Intensity "Scotchlite" Tape.

Part Number	Description	Material/Specification
X451506-0206	Signals, 4-Unit Crossing	Using 8-3/8" Lgt.
X451506-0205	Signals, 2-Unit Crossing	Using 8-3/8" Lgt.
X451506-0204	Signals, 4-Unit Crossing	Using 12" Lgt.
X451506-0203	Signals, 4-Unit Crossing	Using 8-3/8" Lgt.
X451506-0202	Signals, 2-Unit Crossing	Using 12" Lgt.
X451506-0201	Signals, 2-Unit Crossing	Using 8-3/8" Lgt.

| Group Number | | |

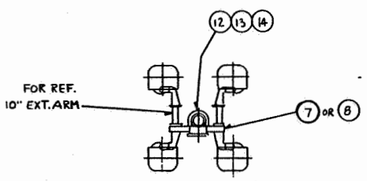

PLAN VIEW "A"
SHOWING JCT. BOX ASS'Y MOUNTED TO 5" PIPE

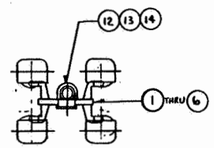

PLAN VIEW
SHOWING JCT. BOX ASSY. MOUNTED TO 5" PIPE

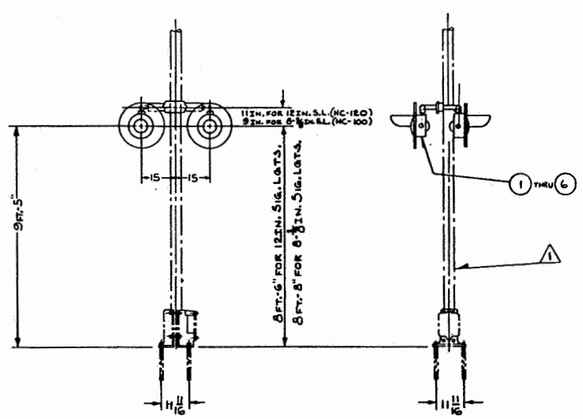

VERTICAL & HORIZONTAL ADJUSTMENTS

HC-100

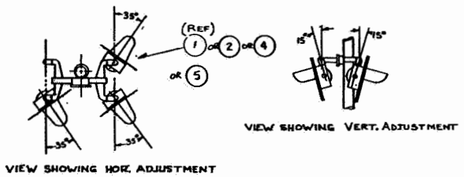

VIEW SHOWING HOR. ADJUSTMENT

VIEW SHOWING VERT. ADJUSTMENT

HC-120A

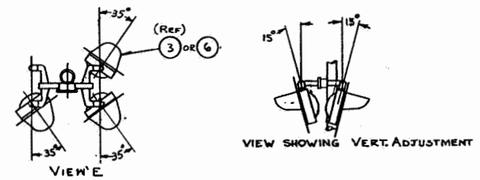

VIEW "E"
SHOWING HOR. ADJUSTMENT

VIEW SHOWING VERT. ADJUSTMENT

GROUP NUMBER 0308	0307	0306	0305	0304	0303	0302	0301	ITEM NO.	X451506 PART IDENTIFICATION T	NUMBER	SEE GROUP / SH'T	SIGNALS DESCRIPTION	F451506 DRAWING T	NUMBER	SHEET	SUB	APPLICATION SHEET	VIEW
—	—	—	—	—	—	—	1	1	N	451506	1101	JCT. B. & 2 HC-100 ASSY	F	451506	11			
—	—	—	—	—	—	1	—	2	N	451506	1108	JCT. B. & 2 HC-100 ASSY	F	451506	11			
—	—	—	—	—	1	—	—	3	N	451506	1001	JCT. B. & 2 HC-120A ASSY	F	451506	10			
—	—	—	—	1	—	—	—	4	N	451506	1103	JCT. B. & 4 HC-100 ASSY	F	451506	11			
—	—	—	1	—	—	—	—	5	N	451506	1110	JCT. B. & 4 HC-100 ASSY	F	451506	11			
—	—	1	—	—	—	—	—	6	N	451506	1003	JCT. B. & 4 HC-120A ASSY	F	451506	10			
1	—	—	—	—	—	—	—	7	N	451506	1005	JCT. B. & 4 HC-120A ASSY	F	451506	10			
—	1	—	—	—	—	—	—	8	N	451506	1105	JCT. B & 4 HC-100 ASSY	F	451506	11			
								9										
								10										
1	1	1	1	1	1	1	1	11	—		—	PRINT	F	451506	03			
1	1	1	1	1	1	1	1	12	H	397808		U-BOLT	B	35152	23			
2	2	2	2	2	2	2	2	13	J	480210	0156	NUT, 5/8-11 HEX JAM	V	480210	01			
2	2	2	2	2	2	2	2	14	J	475132	0118	WSHR., 5/8 STL. PL.	V	475132	01			

NOTES:

1. PARTS SHOWN IN DOT & DASH INDICATES CUSTOMERS EQUIPMENT.
2. FOR APPLICATION DWG. SHOWING HWY. CROSS. SIGNALS MOUNTED TO 4" PIPE SEE F451506-SH.01.
3. FOR APPLICATION DWG. SHOWING HWY. CROSS. SIGNALS MOUNTED TO CANTILEVER SEE F451506-SH.07
4. FOR REF. ONLY:
   - LAMP, 10V-18W (UJ71463)
   - LAMP, 10V-25W (UJ71574).
   - LAMP, 110V-25W (UJ714054)
5. ALL COMPONENTS TO BE SHIPPED IN SAME CONTAINER.

PART NUMBER	DESCRIPTION	MATERIAL/SPECIFICATION
X451506-0308	SIGNALS, 4-UNIT CROSSING	USING HC-120A (30"-15" LENS) PER PLAN VIEW "A"
X451506-0307	SIGNALS, 4-UNIT CROSSING	USING HC-100 (30"-15" LENS) PER PLAN VIEW "A"
X451506-0306	SIGNALS, 4-UNIT CROSSING	USING HC-120A (30"-15" LENS)
X451506-0305	SIGNALS, 4-UNIT CROSSING	USING HC-100 30"-15" WITH 2 INCH HOT SPOT
X451506-0304	SIGNALS, 4-UNIT CROSSING	USING HC-100 (30"-15" LENS)
X451506-0303	SIGNALS, 2-UNIT CROSSING	USING HC-120A (30"-15" LENS)
X451506-0302	SIGNALS, 2-UNIT CROSSING	USING HC-100 30"-15" WITH 2 INCH HOT SPOT
X451506-0301	SIGNALS, 2-UNIT CROSSING	USING HC-100 (30"-15" LENS)

APPLICATION OF MODEL XA-120 JUNCTION BOX & CROSS-ARM FOR HIGHWAY CROSSING SIGNALS
WITH TWO OR FOUR WAY FLASHING UNITS
(FOR 5" PIPE)
(WITHOUT FOUNDATION BOLTS)

Drawing F451506 sh. 3, Rev. 7

Figure 5-4. Application Drawing

Group Number															
									X	451506	0402	SIGNALS	F	451506	04
										PART IDENTIFICATION				DRAWING	
		D0406	D0405	D0404	D0403	D0402	D0401	ITEM No.	TY	NUMBER	SUFFIX	DESCRIPTION	TY	NUMBER	SHEET/SH
		1	1	1	1	1	1	1	N	451415	0302	BOX, JCT. & CROSS-ARM (4 UNITS)	F	451415	03
		—		4	—	—	4	2	N	394817		(30°-15° DEF.) (8-3/8") SIGNAL, HWY. CROSSING	F	80170	01
		—	4	—	—	4	—	3	N	437283		(30°-15° DEF.) (8-3/8") SIGNAL, HWY. CROSSING	F	80170	01
								4							
		—	4	4	—	4	4	5	M	390713	—	BACKGROUND (8-3/8")	D	66217	06
		—	4	4	—	4	4	6	M	390714	—	HOOD (8-3/8")	D	66217	07
		4	—	—	4	—	—	7	N	451497	0103	(30°-15° DEF.) (12") SIGNAL, HWY. CROSSING	R	451497	01
		4	—	—	4	—	—	8	M	451498	0402	BACKGROUND (12")	D	451498	04
		4	—	—	4	—	—	9	N	451498	0203	HOOD (12")	D	451498	02
		—	—	—	1	1	1	10	M	392791	—	BOLT, 5/8" U (4" PIPE)	B	35152	23
		1	1	1	—	—	—	11	M	397808	—	BOLT, 5/8" U (5" PIPE)	B	35152	23
		2	2	2	2	2	2	12	J	475132	0118	WASHER, 5/8" PL. STL. GALV.	V	475132	01
		2	2	2	2	2	2	13	J	480210	0156	NUT, 5/8-11 HEX. STL. GALV.	V	480210	01
		1	1	1	1	1	1	14		—	—	PRINT	F	451506	04

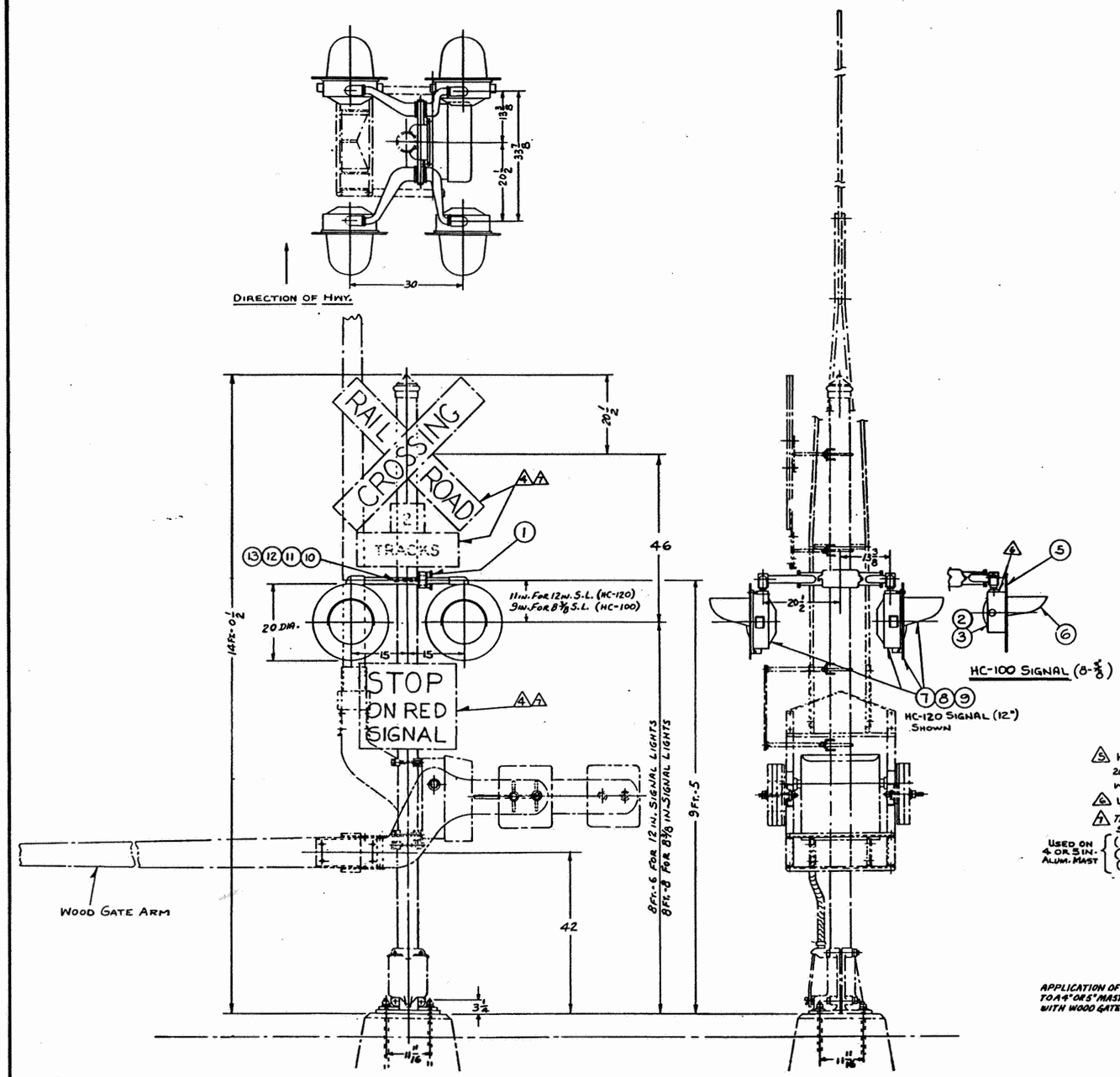

(FOR REF ONLY)
LAMP, 10V-18W (UJ71463)
LAMP, 10V-25W (UJ71574)
LAMP, 110V-25W (UJ714054)

Drawing F451506 sh. 4, Rev. 6

5 HC-100 HWY. CROSSING SIGNALS WITH 20° SPREADLITE & 10° VERTICAL DEFLECTION WITH 2 IN. HOT SPOT. (WIRED)

6 LAMP SUPPORT FURNISHED WITH ITEMS 2 & 3

7 THE FOLLOWING PARTS ORDERED AS REQ'D: SIGNS WITH HI-INTENSITY REFLECTIVE "SCOTCHLITE" TAPE
USED ON 4 OR 5 IN. ALUM. MAST:
(No. OF TRACKS) SIGN, X437997-001, D66217-SH.12A
(STOP ON RED) SIGN, X438077-001, D66217-SH.13A
(RAILROAD CROSS.) SIGN, X438002-003, D66217-SH.14B

APPLICATION OF MODEL X480 JUNCTION BOX & CROSS ARM TO A 4" OR 5" MAST WITH A GATE MECHANISM EQUIPPED WITH WOOD GATE ARM.

NOTES:

1 UNLESS OTHERWISE SPECIFIED, DIMENSIONS ARE FOR REF. ONLY.

2 PARTS SHOWN IN DOT & DASH — ORDER AS REQ'D.

3 ALL HWY. CROSSING SIGNALS (ITEMS 2, 3 & 7) WIRED COMPL. FOR MOUNTING.

4 THE FOLLOWING PARTS ORDERED AS REQ'D.: SIGNS WITH ENGINEER GRADE REFLECTIVE "SCOTCHLITE" TAPE
USED ON 4 OR 5 IN. ALUM. MAST:
(No. OF TRACKS) SIGN X437997-D66217-SH.12A
(STOP ON RED SIG.) SIGN X438077-D66217-SH.13A
(RAILROAD CROSS.) SIGN X438002-002-D66217-SH.14B
(STOP ON RED SIG.) SIGN X438077-002-D66217-SH.13A

PART NUMBER	DESCRIPTION	MATERIAL/SPECIFICATION
X451506-0406	SIGNALS, 4-UNIT CROSSING	USING 12" LGT. (30°-15° DEF.) 5" PIPE
X451506-0405	SIGNALS, 4-UNIT CROSSING	USING 8-3/8" LGT. 5 5" PIPE
X451506-0404	SIGNALS, 4-UNIT CROSSING	USING 8-3/8" LGT. (30°-15° DEF.) 5" PIPE
X451506-0403	SIGNALS, 4-UNIT CROSSING	USING 12" LGT. (30°-15° DEF.) 4" PIPE
X451506-0402	SIGNALS, 4-UNIT CROSSING	USING 8-3/8" LGT. 5 4" PIPE
X451506-0401	SIGNALS, 4-UNIT CROSSING	USING 8-3/8" LGT. (30°-15° DEF.) 4" PIPE

Figure 5-5. Application Drawing